COOLING UNITS & STORES

CU-350 ECO

PRODUCT ADVANTAGES

- Energy-efficient
- Easy to maintain
- Digital display
- Thermostat suitable for both food and wine
- Can connect to external lamp

Model	Item number
CU-350 ECO	12600005

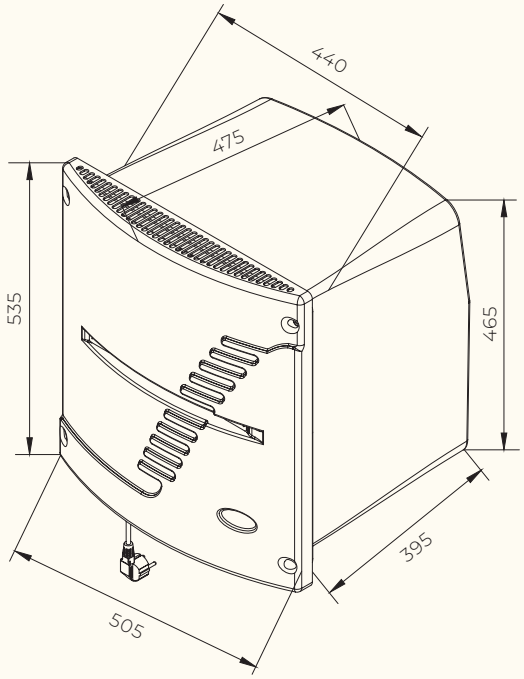

TECHNICAL DATA

Dimensions	
External dimensions	W505 x H535 x D475 mm
Wall cutout	W460 x H490 mm
Weight	28 kg
Capacity	Up to 5.000 liters
Max. wall thickness	330 mm
Min. distance to cold side of ceiling	100 mm
Min. distance to warm side of ceiling and floor	500 mm
Power cable	2,6 meters

Noise	
Noise level	48,6 dB

Temperature	
Temperature range	2-18˚C
Ambient temperature	16-38˚C
Defrosting	Automatic

Energy	
Max output	400 W
Lighting	LED 5 W
Contact for external light	Max. 20 W LED

Miscellaneous	
Water overflow	Can be connected to a drain for extra safety
Refrigerant	R290

COOLING UNITS & STORES

CU-450 ECO

PRODUCT ADVANTAGES

- Energy-efficient
- Easy to maintain
- Digital display
- Thermostat suitable for both food and wine
- Can connect to external lamp

Model	Item number
CU-450 ECO	12600050

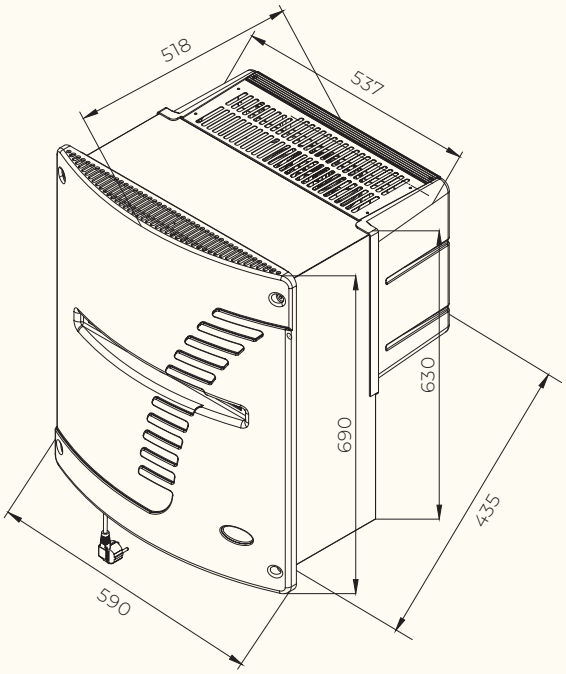

TECHNICAL DATA

Dimensions	
External dimensions	W590 x H690 x D518 mm
Wall cutout	W550 x H650 mm
Weight	33 kg
Capacity	Up to 10.000 liters
Max. wall thickness	230 mm
Min. distance to cold side of ceiling	100 mm
Min. distance to warm side of ceiling and floor	500 mm
Power cable	2,6 meters

Noise	
Noise level	49,3 dB

Temperature	
Temperature range	2-18˚C
Ambient temperature	16-38˚C
Defrosting	Automatic

Energy	
Max output	500 W
Lighting	LED 6,5 W
Contact for external light	Max. 20 W LED

Miscellaneous	
Water overflow	Can be connected to a drain for extra safety
Refrigerant	R290

COOLING UNITS & STORES

CU-900 ECO

PRODUCT ADVANTAGES

- Energy-efficient
- Easy to maintain
- Digital display
- Thermostat suitable for both food and wine
- Can connect to external lamp

Model	Item number
CU-900 ECO	12600150

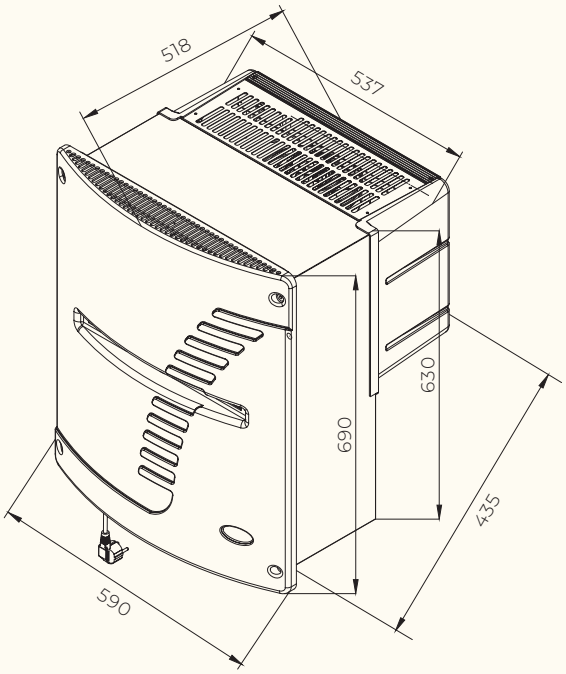

TECHNICAL DATA

Dimensions	
External dimensions	W590 x H690 x D518 mm
Wall cutout	W550 x H650 mm
Weight	37,5 kg
Capacity	Up to 20.000 liters
Max. wall thickness	230 mm
Min. distance to cold side of ceiling	200 mm
Min. distance to warm side of ceiling and floor	500 mm
Power cable	2,6 meters

Noise	
Noise level	55 dB

Temperature	
Temperature range	2-18˚C
Ambient temperature	16-38˚C
Defrosting	Automatic

Energy	
Max output	800 W
Lighting	LED 6,5 W
Contact for external light	Max. 20 W LED

Miscellaneous	
Water overflow	Must be connected to a drain for extra safety
Refrigerant	R290