io mabe

BOTTOM FREEZER



PRODUCTSHEET

IWO19JSPF 80

CHOOSE

CUSTOMIZE

COOL

SERIES IWO19JSPF



IWO19JSPF 80

freestanding
doors, sides and top in stainless steel
straight corners
'Café' handles in stainless steel

INSIDE

io mabe

TURBOCOOL **DOORALARM** **SABBATH MODE**



LED-LIGHTING
Bright and effective lighting. The LED lighting is fully integrated in the walls, so that no capacity is lost.

WATER FILTER (GE SMARTWATER)
Our water filter will remove chlorine, lead, cysts, mercury, and many other contaminants. By reducing contaminants and odors, we have cleaner and better tasting water and ice.

QUICKSPACE SHELF
Creates extra storage space for tall items such as flowers, special desserts, and bottles.

ADJUSTABLE, SPILL-PROOF GLASS SHELVES
Provide storage flexibility, ease of use and quick clean-up – benefits every consumer appreciates.s

WATER DISPENSER
Chilled and filtered water



ADJUSTABLE CLEARLOOK DOOR BINS
Large capacity door compartments in clear, tough Lexan. These can be removed and repositioned, making maintenance easy and allowing you to match the layout to your requirements.

2X ADJUSTABLE HUMIDITY CRISPERS
Provide the ideal storage environment, keeping fruits and vegetables crisp and fresh.

ADJUSTABLE TEMPERATURE DELI DRAWER
Provides a temperature-controlled, easy access environment for fresh foods.

VENTILATION
Ventilaion on the front



LED-LIGHTING
Bright and effective lighting. The LED lighting is fully integrated in the walls, so that no capacity is lost.

INTEGRATED ICE-MAKER
Ice is easy to access directly from the ice bin

MULTI-LEVEL SLIDE N' STORE FREEZER DRAWERS
In the freezer compartment there are two full extension drawers for easy access to all frozen food items.

FULL NO-FROST

WATER DISPENCER

ICEMAKER

NO FROST MET FROSTGUARD-TECHNOLOGIE

No Frost ventilated cooling guarantees homogeneous temperatures which enable you to store your food better and freeze it more efficiently. The FrostGuard technology makes automatic defrosting a lot more convenient. Your refrigerator will only defrost when it is necessary on the basis of precise measurements (e.g. on the basis of the number of freezer door openings, compressor running time etc.). FrostGuard also prevents frozen food from partly defrosting during the defrost cycle by performing extra chilling as low as -30ºC (pre-chill) just before defrosting and by keeping the complete defrost cycle very short. This considerably reduces the risk of freezer burn. This technology means that food can be stored longer and better, and you no longer need to defrost manually.



FULL NO-FROST

MULTIFLOW AIR SYSTEM TECHNOLOGIE

In order to keep your food fresh for as long as possible, these technologies ensure a uniform and precise temperature in each of the refrigerator's compartments. This is achieved by fitting sensitive electronic sensors, an air tunnel across various levels and fans linked to the most advanced electronics. This considerably improves the quality and storage life of your food.
The electronic controls enable you to independently monitor the refrigerator and freezer temperatures, as a result of which the temperature differences are smaller and your food will remain fresher and can be stored for longer. When you close the door of your refrigerator or freezer, it will only take a few minutes to return to the programmed temperatures



FRESH FOR LONGER

ENERGYSMART

Improved features such as the electronic sensors and FrostGuard mean that iomabe refrigerators have a much better energy consumption. They save a great deal of energy compared to appliances from earlier generations. Thanks to this technology these American refrigerators perform exceptionally well in their energy class without affecting the quality of chilling, storage and freezing. The entire iomabe collection is in the energy-efficient E class.





A SMART CHOICE

American performance, European design.

Let's make your kitchen **cool** again!

DIMENSIONS

FREESTANDING

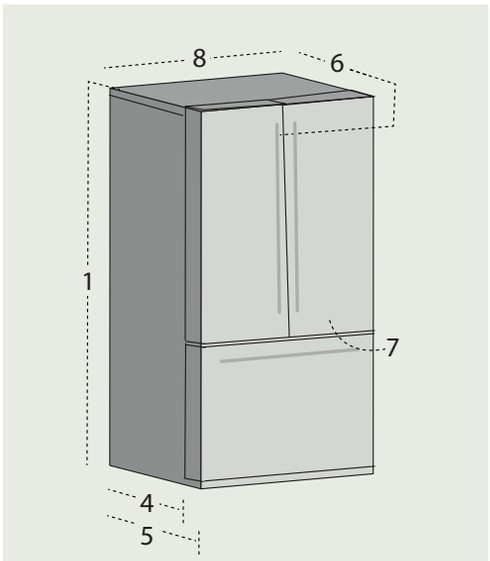

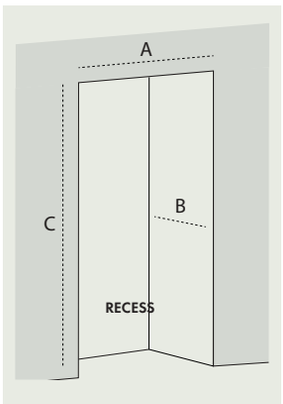

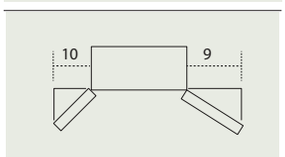

Freestanding	
Series IWO19JSPF	**80 - 8RAL 8BM - 8WM**
1. Height to top of case	1805
2. Height to top of hinge	1805
3. Height to top of door	1805
4. Depth of case without door	625
5. Depth without handles	734
6. Depth incl. "Cafe" handles	802
Depth incl. "Design" handles	774
7. Total depth with door open 90°	1070
8. Width	850
9. Width of open door (R)	320
10. Width of open door (L)	320
Recess dimensions	
A. Recess width	855
B. Recess depth*	632
C. Recess height	1815

TECHNICAL SPECIFICATIONS & FUNCTIONS

FUNCTIONS	IWO19
Waterdispenser	yes (internal)
Ice-maker (automatc)	yes (internal)
Slide'n Store freezer baskets	2x
Fruit and vegetable drawer with adjustable humidity	2x
Waterfiter GE SmartWater	XWF
ClearLook door bins (adjustable)	8x (4)
Adjustable glass shelves	3x
Adjustable QuickSpace shelf	1x
Draagplateau over de gehle breedte	1x
Afgesloten delicatessenlade (temp. verstelbaar)	1x
Crisp clear LED-lighting (freezer)	yes
Crisp clear LED-lighting refrigirator)	yes
Sabbath mode	yes
Door alarm	yes
Indicator replace waterfilter	yes
TurboCool	yes
Electronic control (including the temperature settings)	yes (internal)

	BottomFreezer
Series	**IWO19**
Total Gross/Net (litres)	527
ISO Gross/Net refrigerator compartment (litres)	385
ISO Gross/Net freezer compartment (litres)	142
Energy consumption (kWh/a)	263
Energy class	E
Climate class	T (16°C - 43°C)
Freezer stars	****
Noise level (dB (a))	45
Type of defrosting / automatic	No Frost / ja