QV30

SCHEDA TECNICA • TECHNICAL SHEET



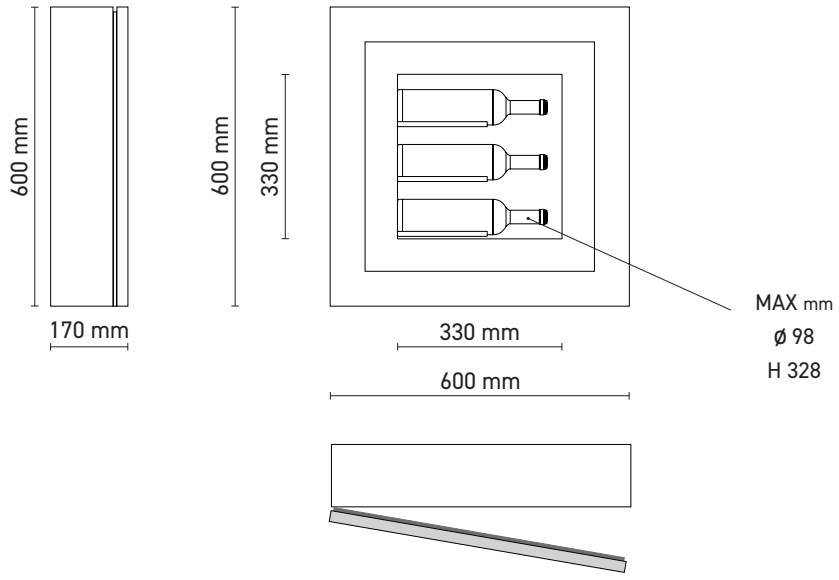

CODE	W x D x H	Kg	L	0,75 LT	°C	dB	V	W	KWh annum	USE
QV30	600 x 600 x 170	22	11	3	+8 / +18	29	120 - 240V	60	170	Professional/Domestic

TECHNICAL SPECIFICATIONS

Digital temperature controller
Thermoelectric cooling system with dual high-efficiency Peltier modules
Custom-made extruded aluminium hot-side heat sink
CNC-machined cold-side heat sink made from solid aluminium
Automatic defrosting
Automatic condensate evaporation
User-adjustable temperature (+8°C to +18°C)
Natural White LED lighting (4000 K – Continuous COB Strip – 4.8 W/m – 336 lumens/m – 12 V), adjustable via touch dimmer
Current consumption: 0.2 A (120 V / 60 Hz) – 0.4 A (240 V / 50 Hz)
Climate class: 3 (EN 60335-2-89) – SN-N (EN 60335-2-24)
Powder-coated metal structure
Single non-reversible hinged door
Vertical bottle arrangement
Low-emissivity double glazing – UV protection – Argon gas filling
Removable locking pin system with magnetic support

TEMPERATURE SETTING

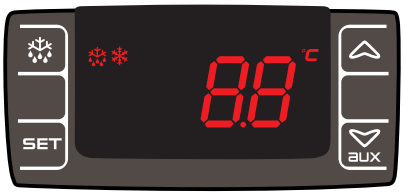

The temperature can be easily adjusted using the digital temperature controller located behind the internal finishing panel.
The different models in the collection offer unique features, making them ideal for displaying and preserving both white and red wines.

INSTALLATION

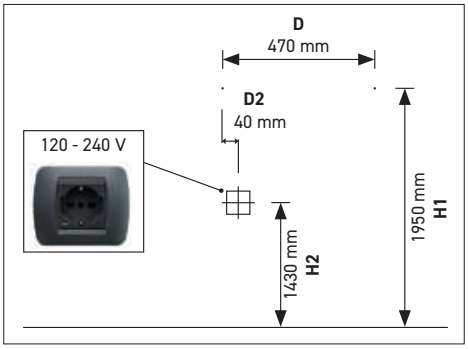

For component positioning, refer to the drawing above, where (D) indicates the centre-to-centre distance and (H1) the height at which the mounting brackets must be positioned, while (H2) and (D2) indicate the position of the electrical socket.

SHIPPING INFORMATION

Dimensions including pallet packaging	Weight including pallet packaging	Volume including pallet packaging
750 x 750 x 400 mm	35 kg	0,22 m^3

KEY

W x D x H	Net dimensions	0,75 LT	Number of bottles	V	Voltage
Kg	Net weight	°C	Temperature	W	Power consumption
	Internal volume	dB	Noise level – Sound pressure Leq (h 155 cm – d 100 cm)	USE	Application

EXTERNAL FINISHES

Quadro Vino can be customised with a choice of frame designs – Linear, Classic and Dune – available in a wide range of standard colours or, upon request, in any RAL colour.

MDF

Linear frame



L-M01 Unpainted
RAL9005 Matt black

AYOUS

Dune frame



D-GR Unpainted
D-RAL9010 Matt white
D-RAL9005 Matt black
D-LM01 Gold
D-LM02 Silver
D-LM03 Bronze
D-LM04 Soft gold
D-LM05 Rose gold
D-LM06 Pearl

AYOUS

Classic frame



C-GR Unpainted
C-RAL9010 bianco opaco
C-RAL9005 nero opaco
C-LM01 oro
C-LM02 argento
C-LM03 bronzo
C-LM04 oro tenue
C-LM05 oro rosa
C-LM06 perla

HPL
High Pressure Laminate

Linear frame

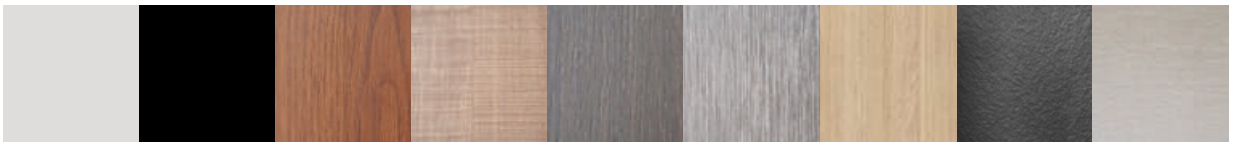

L10 Matt white
L11 Matt black
L20 Chestnut
L21 Teak roble
L22 Loft wenge
L23 Ash larch
L24 Light oak
L30 Textured black
L40 Taupe concrete



L42 Corten
L50 Satin steel
L51 Satin gold
L52 Satin bronze
L53 Satin black

MDF
DUNE
CLASSICA
HPL



RAL 20
Matt, 20 gloss

INTERNAL FINISHES

The internal panel can be finished in metal or synthetic leather, with a variety of textures and colours. Like the mount of a picture frame, this element draws attention to and enhances the framed display, highlighting the finest wines.

STEEL



RAL 9005
Matt black

SYNTHETIC LEATHER



E10 White
E11 Black
E12 Grey
E13 Red
E14 Bronze
E39 Red python
E40 Black reptile
E41 Blue reptile
E50 Tobacco

CORK



E30 Mesh
E31 Herringbone