APM120

Wall-mounted hood, 121,6 cm

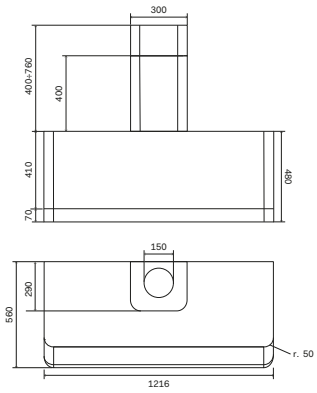



General features

- Energy class A
- Body AISI 304 stainless steel
- Filters anodised aluminium
- Dimensions 121,6×56×41 cm
- Flue outlet hole dimension 15 cm
- Maximum air flow perimetrale da 1000 m³/h
- Maximum power 345 W
- Speed 3 + intensive
- Automatic filter cleaning warning light
- Lighting LED lighting strip 13W
- Remote control Optional
- Automatic delayed shutdown

Hood speed

Speed	W	Pa	m³/h	dB
1	75	0	270	35
2	135	0	380	44
3	220	0	550	52
4	345	0	920	62

Colour range

Stainless steel
– SS

Finishes

Satin