INDUCTION HOBS

HVI364/395

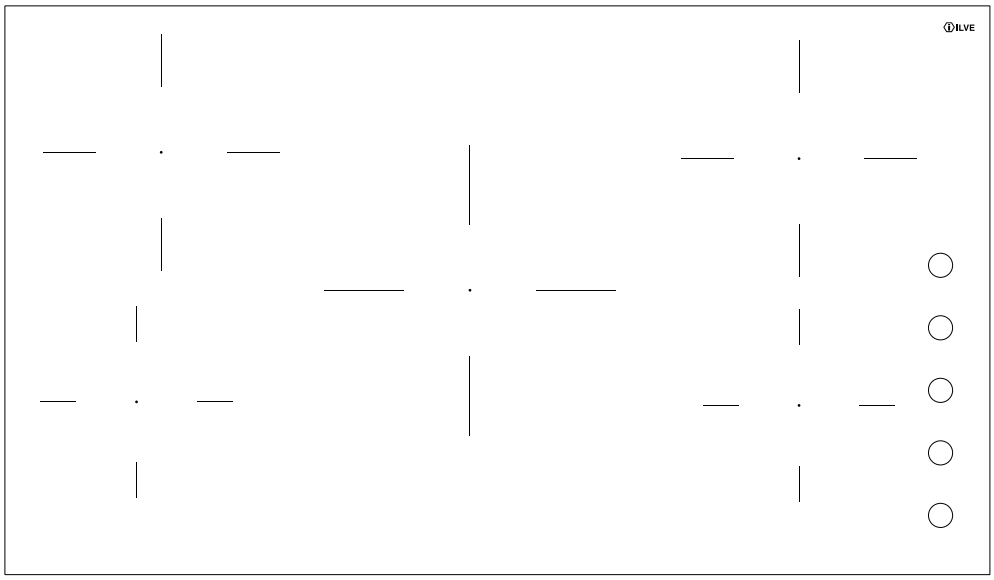

EN | User manual

ILVE

IMPORTANT SAFETY INSTRUCTIONS

WARNING

The appliance must be installed by authorized personnel. The installer is not responsible for any damage caused by incorrect electrical connections.

1. The induction hob must be installed by qualified personnel and in compliance with the applicable regulations. Ensure that any live parts beneath the built-in unit are properly protected. The electrical connection diagram is shown on the label near the terminal block. In case of direct connection to the mains, a multipole switch with a minimum contact opening of 3 mm must be installed. The connection to the power supply must be isolated by a suitable disconnection device: switch or fuse.
2. The hob must be installed in a suitable housing (see chapter Installation).
3. The appliance must be used exclusively for cooking food and not for any other domestic or industrial use.
4. Remove the stickers from the glass surface of the hob.
5. Do not modify or alter the appliance.
6. Do not use the hob as a worktop.
7. The appliance must be connected and installed in accordance with local regulations.
8. Do not use extension cords for the connection.
9. The appliance must not be used with cookware that is not suitable for induction cooking.
10. This appliance can be used by children aged from 8 years and by persons with reduced physical, sensory or mental capabilities or lack of experience and knowledge if they are supervised or have been instructed concerning safe use of the appliance and understand the hazards involved.
11. Warning: this appliance and its accessible parts become very hot during use. Keep children under 8 years of age away unless continuously supervised. Children must be supervised to ensure that they do not play with the appliance.
12. After use, switch off the cooking zone using its control device and do not rely on the pan detector.
13. WARNING: Unattended cooking with fat or oil on the hob can be dangerous and may result in fire.
14. Warning: in the event of a fire, never attempt to extinguish flames with water. Instead, switch off the appliance and smother the flames with a lid or fire blanket.
15. Cleaning and maintenance operations must not be carried out by children without supervision.
16. Ensure that the power supply cable does not come into contact with the glass surface or cookware.
17. Magnetic objects such as credit cards, floppy disks, calculators must not be placed near the operating appliance.
18. Do not use any type of metallic object except induction-compatible cookware.
19. Fire hazard: do not store items on the hob and do not cover the cooking zone with flammable materials.
20. The appliance must be used by responsible persons only.
21. Metallic objects such as knives, forks, spoons, or lids should not be placed on the hob surface as they may become hot.
22. Warning: if the surface is cracked, turn off the appliance to avoid the risk of electric shock.
23. The appliance is not intended to be operated by means of an external timer or a separate remote control system.
24. Do not use steam cleaners to clean the hob.
25. The cooking process must be supervised. A short-term cooking process must be continuously supervised.

Precautions to avoid damaging the appliance

1. The product must be cleaned following the instructions provided in the Cleaning and Maintenance chapter.
2. Unsuitable cookware may damage the hob surface.
3. Do not use abrasive materials for cleaning.
4. Avoid dropping heavy objects on the hob surface.
5. Place cookware gently on the hob.
6. Ensure that the ventilation of the appliance complies with the instruction manual.
7. Do not place empty cookware on the hob.
8. Sugar, synthetic materials, or aluminum materials must not come into contact with the cooking zones.
9. Avoid placing hot containers on the control panel.
10. If a drawer or panel is installed beneath the hob, it must be at least 2 cm away from the bottom of the appliance to allow proper ventilation.
11. Do not store flammable items in the drawer located beneath the hob.

IMPORTANT SAFETY INSTRUCTIONS

In case of malfunction

1. In the event of a malfunction, switch off and disconnect the appliance.
2. If the glass surface is cracked or broken, disconnect the appliance and contact an authorized service center.
3. Any repairs must be carried out by authorized personnel.
4. THE SWITCH MUST BE ACCESSIBLE AFTER INSTALLATION.

Precautions

1. Make sure the cookware is centered on the cooking zone. Ideally, the base of the cookware should cover the entire cooking zone.
2. The magnetic field generated by the induction hob may interfere with the operation of pacemakers. It is recommended to consult a physician for detailed information.
3. Avoid contact between the cooking zones and synthetic or aluminum materials.
4. This appliance, in compliance with the European WEEE Directive (2012/19/EU), must be disposed of separately from other waste at the end of its service life. This appliance does not contain substances in quantities considered hazardous to health or the environment, in accordance with current European directives.
5. ⚠ Electrical voltage: risk of electric shock. Disconnect the main power supply. Unplug the power cable from the electrical system.

Disposal

1. To dispose of the appliance: cut the power supply cable and remove it. Deliver the appliance to appropriate collection centers for waste electrical and electronic equipment, or return it to the retailer upon the purchase of an equivalent device, on a one-to-one basis.
2. The packaging of the appliance is made from non-polluting and recyclable materials. Deliver the packaging materials to appropriate recycling centers.
3. Plastic packaging: risk of suffocation. Do not leave packaging or parts of it unattended. Do not allow children to play with plastic bags.
4. The materials used in the construction of this appliance are environmentally friendly and recyclable. Packaging waste must be kept out of reach of children and disposed of through appropriate recycling channels. For disposal of your appliance, please refer to the waste collection options provided by your retailer and/or local authorities. Before discarding the appliance, make sure to render it unusable.

INSTRUCTIONS FOR USE

Use of the induction hob

Cooking zones

HVI 364

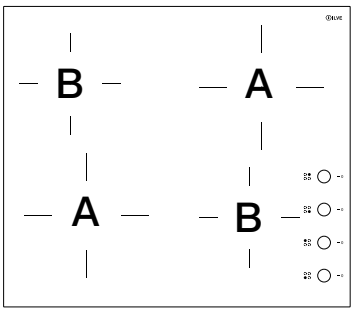

HVI 395

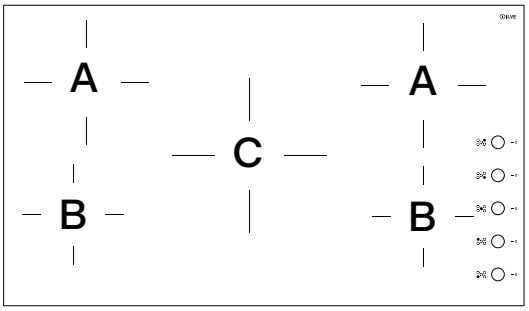

ZONE	A	B	C
Diametro (mm)	ø 200	ø 145	ø 250
Diametro min. pentola (mm)	ø 110	ø 110	ø 145
Potenza (watt)	2300	1400	2300
Booster (watt)	3000	1850	3000

Standby mode

The appliance enters standby mode after 1 minute of inactivity. Power consumption in standby mode is 0.5 W.

First Use

Clean the cooktop surface with a damp cloth.

Ventilation

The hob ventilation is fully automatic. The cooling fan located beneath the hob operates at low speed until the electronic components reach a certain temperature level. When the hob is used for extended periods, the cooling fan speed increases. Once the electronics have cooled down, the cooling fan stops automatically.

Induction

Under each cooking zone, there is a coil that generates, when a pot is placed on it, a variable electromagnetic field, producing eddy currents on the bottom of the pot made of ferromagnetic material. The end result is the heating of the pot's bottom placed on the cooking zone. The type of cookware material is fundamental:

- **Suitable materials:** steel, enameled steel, cast iron, ferromagnetic steel, aluminum with a ferromagnetic base (this can be tested with a magnet);
- **Unsuitable materials:** aluminum and steel without a ferromagnetic base, copper, ceramic, porcelain, glass, brass.

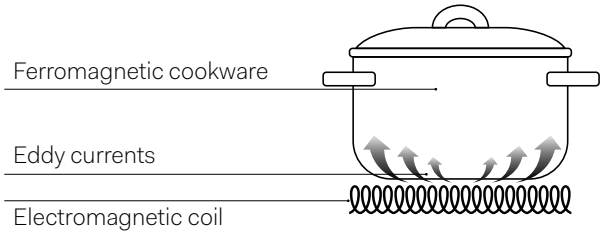

Display

Symbol	Description
0	Cooking zone is active
1-9	Power level – Select cooking level
P	Booster – Cooking zone power boost
U	Pot detection – No pot or unsuitable pot detected
A	HEAT-UP Function
H	Residual heat – Cooking zone is hot
U	Warming food at 42°c
E	External error
	Continuous knob rotation
	Key-Lock

INSTRUCTIONS FOR USE

Use of the induction hob

Knobs

The knobs are not numbered; the power level will be shown on the display.

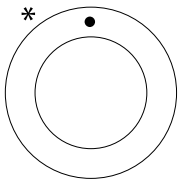

Fig.A

Switching on a cooking zone

Turn the corresponding knob clockwise. The symbol and the selected power level (from 1 to 9) will appear on the cooktop display, accompanied by an acoustic signal.

Switching off a cooking zone

A cooking zone is switched off by turning the corresponding knob counterclockwise. The symbol remains visible on the display for 10 seconds, then disappears, accompanied by an acoustic signal. If the zone is still hot, the symbol [H] will appear over the relevant area.

Automatic shut-off

The appliance switches off automatically in the event of overheating or power supply errors.

BOOSTER Function

The booster function increases the power of a specific cooking zone to reduce cooking time. This function is activated by turning the knob clockwise from the 0 (off) position to the end stop (* fig. A). After a short acoustic signal, a [P] appears on the display, indicating that the booster function is active. The booster function lasts for a maximum of 5 minutes. After this time, the zone will automatically return to power level [9]. The booster function ends before the set time when:

- A lower power level is selected;
- The pot is removed;
- The appliance or cooking zone overheats.

The booster function takes precedence over the “Heatup” function.

Pan detection

Each cooking zone is designed to operate with induction-compatible cookware having a diameter similar to that of the selected zone. If the pan is not suitable, the display for that zone will show the pan-absent symbol (U), and the appliance will not operate. This prevents the zone from switching on until a pan is placed on the zone or an appropriate induction-compatible pan is used. If the pan is removed during operation, the zone will switch off. Pan detection lasts for 10 minutes. If no suitable cookware is placed on the cooking zone during this time, the zone will switch off.

“HEAT-UP” Function

The Heat-up function, or rapid heating, is available on each cooking zone. This means that the zone will operate at maximum power for a set amount of time, after which the power automatically adjusts to the selected level. The duration of the initial boost depends on the selected power level. The Heat-up function is activated by turning the knob counterclockwise from the 0 position to the end stop and holding it there for 2 seconds. After a short acoustic signal, an [A] appears on the corresponding zone display. After activation, a power level must be selected within 10 seconds to continue cooking; otherwise, the Heat-up function will be cancelled.

KEY-LOCK Function

The Key-lock function is useful when children are present. However, it is always recommended that an adult supervises the appliance during operation. When the Key-lock function is activated, all cooking zones are switched off and cannot be accidentally turned on.

The Key-lock function is activated by turning the knobs for zones 1 and 2 counterclockwise from the 0 position and holding them for approximately 3 seconds. The display will show the text **ON** and the symbol

Repeating the same operation deactivates the Key-lock function. If a knob is turned while the Key-lock function is active, the display will show the text **ON** and the symbol .

HVI 364

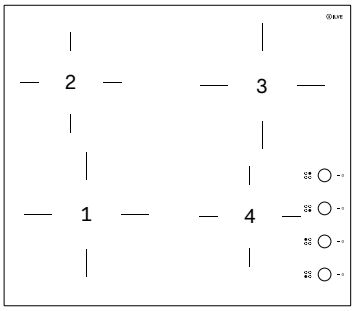

HVI 395

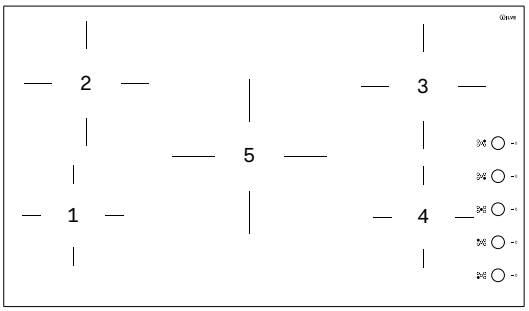

INSTRUCTIONS FOR USE

Use of the induction hob

Funzione Riscaldamento (42°)

Girare la manopola in senso orario. Tra la posizione di zona spenta (0) e la posizione di potenza (1) esiste la posizione (u) che identifica la funzione di riscaldamento delle pietanze all'interno della pentola a 42 °C.

Il tempo massimo per l'utilizzo di entrambe le funzioni è limitato a 120 minuti.

Entrambe le funzioni prevalgono sull'HEAT-UP.

Limitazione della durata funzionamento

A ciascuna zona di cottura è associato un tempo massimo di funzionamento continuo. Questo dipende dal livello di potenza impostato. Nel caso in cui la limitazione della durata di funzionamento venga raggiunta, la relativa zona viene spenta.

POWER LEVEL	DURATION (hours)
U	2
1	6
2	6
3	5
4	5
5	4
6	1,5
7	1,5
8	1,5
9	1,5
P	(5 min. [P], followed by 85 min. [9])

Power management

When using the booster function, power management is handled as follows: the most recently selected cooking level takes priority over the others. If the requested power exceeds the available limit, activating a cooking zone will not be shown on the display. In this case, normal operation with power level indication on the display will only begin after reducing the power level by turning the corresponding knob counterclockwise.

Cooking zone overheating

If a cooking zone overheats during operation, the power level is automatically reduced, and the new level is shown on the display. At this point, only a further reduction in power is allowed. Once the temperature of the cooking zone drops below the critical threshold, normal cooking can be resumed.

Cookware

- **Suitable materials: s**tainless steel, enamelled steel, cast iron, ferromagnetic steel, aluminium with ferromagnetic base.
- **Unsuitable materials:** aluminium and steel without ferromagnetic base, copper, ceramic, porcelain, glass, brass.

To check if the cookware is compatible, place it on the cooking zone with a small amount of water. Set the zone to level "9": the water should boil within a few seconds.

Compatible cookware must have a ferromagnetic base (this can be checked using a magnet on the bottom of the pan).

Some cookware may produce "noise" during cooking. This phenomenon does not come from the induction hob and does not affect the cooking performance.

If the cookware is not suitable or not properly placed on the selected zone, the corresponding display will show the symbol "U".

Cookware size

The cooking zones automatically adapt to the diameter of the cookware. However, the base of the cookware must have a minimum diameter for proper operation. For maximum efficiency, place the cookware in the center of the cooking zone.

Recommended cooking settings (purely indicative values)

POWER LEVEL	TYPE OF COOKING
1-2	Melt butter, chocolate, etc.
2-3	Heat small quantities of liquids, keep food warm, prepare sauces.
4-5	Heat solid foods, defrost frozen foods, omelettes with 2-3 eggs, fruits and legumes.
5-6	Cook meat and fish, legumes in sauce, dishes with water, jam preparation.
6-7	Roast meat or fish, steaks, liver, eggs.
8-9	Boil large quantities of water, fry potatoes, etc.
P	Boil large quantities of water.

CLEANING AND MAINTENANCE

WARNING

- At first use, clean the surface of the cooktop with a damp cloth.
- Before performing any cleaning operation, disconnect the appliance from the electrical power supply.
- The work surface must be cleaned only when cooled down. Risk of burns.
- Remove light stains with a damp cloth and then dry with a dry cloth.
- Do not clean with corrosive or abrasive products.
- Do not use any objects that could damage the glass-ceramic cooktop.
- Make sure the bottom of the pot is dry and clean, and that the glass surface is free of dust. Sliding the pot may scratch the glass.
- Immediately remove residues of sugar, jelly, jam to prevent damage to the glass.

TROUBLESHOOTING

Induction hob malfunction

FAULTS	CAUSES
The appliance and cooking zone do not turn on	- The hob has not been correctly connected to the electrical network - The protective fuse is blown - The KEY-LOCK function is activated
The symbol "U" appears on the display	- The pot is not placed on the cooking zone - The pot is not compatible with induction - The diameter of the pot's base is too small - Disconnect the hob from the electrical supply - Contact the authorized service center
The symbol "E" appears on the display	- The electronic system is defective - Disconnect the hob from the electrical supply - Contact the authorized service center
The cooking zones do not work	- The safety system is active - The pot is empty and the bottom has overheated
If the ventilation remains on when the hob is off	- This is not a malfunction. The fan continues to operate to protect the electronics. - The automatic ventilation will stop automatically.

INSTALLATION

Installation regulations

The following instructions are intended for the qualified person responsible for installing the appliance, adjusting it, and performing technical maintenance, ensuring that these operations are carried out correctly and in compliance with current standards.

IMPORTANT: Any adjustment, maintenance, etc., must be performed after disconnecting the appliance from the power supply.

This equipment complies with the following directives:

DIRECTIVE 2002/96/EC

LOW VOLTAGE DIRECTIVE 2014/35/EU

ELECTROMAGNETIC COMPATIBILITY DIRECTIVE 2014/30/EU

REGULATION No. 1935/2004 (contact with food)

Installation must be carried out in a professional manner and in full compliance with the applicable electrical installation regulations. Otherwise, the Manufacturer declines all responsibility. This manual also includes the electrical diagram of your appliance.

Built-in installation

Fixing to the cabinet is done with the appropriate clips, which must be mounted on the steel frame of the hob.

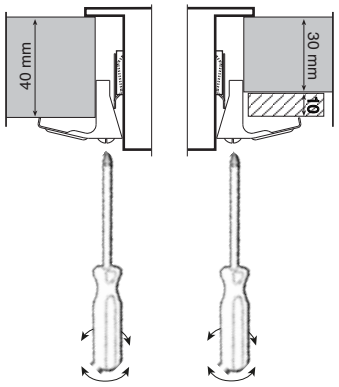

Installation Instructions

Installation must be carried out by qualified personnel. The installer must be familiar with applicable regulations. The gasket supplied with the hob prevents liquid from leaking between the hob and the cabinet. Carefully apply the gasket 2 mm from the edge of the glass. The dimensions of the cut-out are 430 mm (width) x 490 mm (depth). The supplied gasket is sufficient to cover the perimeter of the cut-out. Its adhesive is resistant to temperatures up to 100 °C. The hob is classified as type "Y". For optimal installation, it is recommended to keep the adjacent areas free. However, the installation of one side wall and one rear wall is permitted. These walls must be at least 50 mm away from the hob. If the built-in surface is subject to possible water infiltration, protect the edge of the cut-out with suitable varnish. Do not install the hob above a conventional oven or a dishwasher. Ensure there is a clearance of 20 mm below the hob to allow proper ventilation. Do not store flammable items in the drawer located beneath the hob. The distance between the hob and the cooker hood must comply with the manufacturer's specifications. If no such specifications are provided, maintain a minimum distance of 760 mm. After installation, the connection cable must not be subjected to tension or strain. Installation in mobile environments (e.g., boats) must be performed by specialized personnel.

Ensure there is a minimum clearance of 5 mm between the worktop and the top edge of any drawer or oven to allow air to escape.

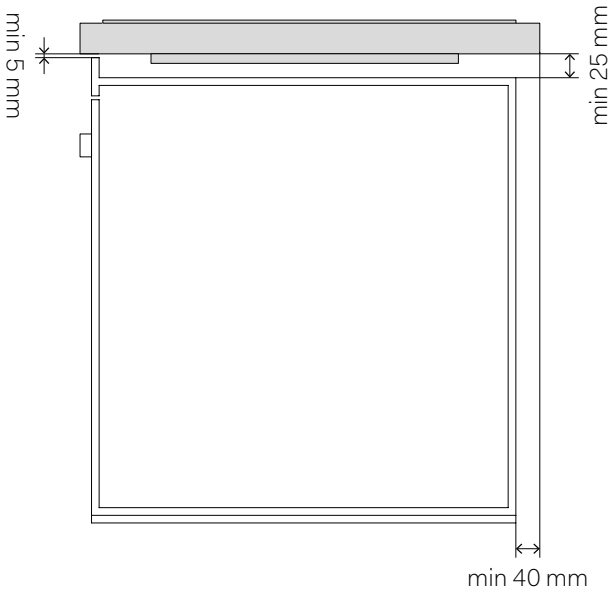

INSTALLATION

Electrical connection

The installation of the induction cooktop must be carried out by qualified personnel and in compliance with current regulations. Ensure that live parts beneath the cut-out are properly protected. The wiring diagram is provided on the label near the terminal block. In the case of direct connection to the mains, a double-pole switch with a minimum contact gap of 3 mm must be installed. The electrical connection to the mains must be protected by an appropriate disconnection device such as a switch or fuse.

- Always connect the earth (ground) cable.
- Follow the wiring diagram carefully.
- The terminal block is located underneath the cooktop at the rear side.
- Use a screwdriver to open the terminal block cover.
- The yellow-green earth conductor must never be interrupted, not even by the switch. The power cable must be installed so that it does not come into contact with surfaces exceeding 50°C above ambient temperature. If the power cable needs to be replaced, contact the authorized service center.

Cable connection to the cooktop

For the different types of connection, use the appropriate jumpers located inside the terminal block:

HVI 364

- SINGLE-PHASE: Connect the supplied bridge between terminals 1–2 and terminals 4–5. The phase must be connected to terminal 1 or 2. The neutral (N) must be connected to terminal 4 or 5.
- 2 PHASES + N: Connect the supplied bridge between terminals 4–5. The neutral (N) must be connected to terminal 4 or 5. Connect one phase to terminal 1 and the second phase to terminal 2.
- EARTH (GROUND): The earth wire ⏚ must be connected to the designated terminal

POWER SUPPLY	CONNECTIONS	CABLE SIZE	CABLE TYPE
220/230/240V a.c. 1P+N 50/60Hz	1 phase + N	3 x 6 mm2	H05RR
380/400/415V a.c. 2P+N 50/60Hz	2 phase + N	4 x 2,5 mm2	H05RR

HVI 395

- 3 PHASES + N: Connect the supplied bridge between terminals 4–5. The neutral (N) must be connected to terminal 4 or 5. The three phases must be connected to terminals 1, 2, and 3 respectively.
- EARTH (GROUND): The earth wire ⏚ must be connected to the designated terminal.

POWER SUPPLY	CONNECTIONS	CABLE SIZE	CABLE TYPE
380/400/415V a.c. 3P+N 50/60Hz	3 phase + N	5 x 2,5 mm2	H05RR

INSTALLATION

Key

00	Black
11	Brown
22	Red
33	White
44	Yellow
45	Yellow-green
55	Grey
66	Blue
AA	Electrical ignition transformer
C	Commutator
CA	Capacitor 1,05 µF
CCDF	Fry-Top switch
CP	Cooking probe
DM	Dumper microonde
DV	Dumper vapore
DS1	Burner control
DU	Wax thermal actuator discharging steam
DY	Display
EL	Solenoid valve
EN	Encoder
F	Phase
F1	Phase 1
FLC	LC Filter
FUSE	Fuse 10A
HVD	High voltage diode
K1	Earth wire terminal block
K2	Earth wire lower resistance
K3	Earth wire oven fan
K4	Earth wire circulating resistance
K5	Earth wire upper resistance
K6	Earth wire oven light 1
K7	Earth wire oven light 2
K8	Earth wire roaster
K9	Earth wire cooling fan.
K10	Earth wire commutator
K11	Earth wire oven thermostat
K12	Earth wire programmer/timer
K13	Earth wire grill resistance
K14	Earth wire piastra elettrica
K15	Earth wire frame
K16	Earth wire barbecue resistance
K17	Earth wire resistenza friggitrice
L1	Oven light
L2	Oven light
M	Terminal block
MA	Electrical ignition microswitch
MD	Grill microswitch
MG	Rotisserie
MGT	Magnetron
MP	Door microswitch

MMO	Monitor microswitch for microwave
MPR	Primary microswitch for microwave
MSEC	Secondary microswitch for microwave
MT	Micro cooling fan
MTK	Water loading tank microswitch
MVT	Cooling fan microswitch
N	Neutral
NTC	Temperature probe
P	Timer\Clock - Timer\Programmer
PB	Power board
PD	Pump
PE	Electric hotplate
PT1000	Temperature probe
R1	Upper resistance
R2	Lower resistance
R3	Grill resistance
R4	Circulating resistance
R5	Barbecue resistance
R6	Fryer resistance
RC	Boiler heating element
RE	Energy controller
RL	Limit resistance
S1	Oven warning light
S2	Mains power warning light
S3	Grill warning light
S4	Cooling fan warning
S5	Barbecue warning light
S6	Electric hotplate warning light
S7	Rotisserie warning light
S8	Residual heat warning light
S9	Fryer warning light
SA	Power supply board
SD	Display board
SE	Auxiliary power board
SI	Interface board
SL	Water level detector
SP	Power board
SR	Safety Relay
SWD	Warming drawer control board
T	Grill thermostat
TCO\TC1	Safety thermostat 318 °C (TCO)
TSPO	Safety thermostat 90 °C
TF	Oven thermostat
TR	Fryer thermostat\ High voltage transformer
TS\TS1\ TS2	Safety thermostat
TST	Tangential motor safety thermostat
TT	Tangential thermostat
V\VR	Oven fan
VT	Cooler fan

INSTALLATION
Wiring diagrams

HVI364

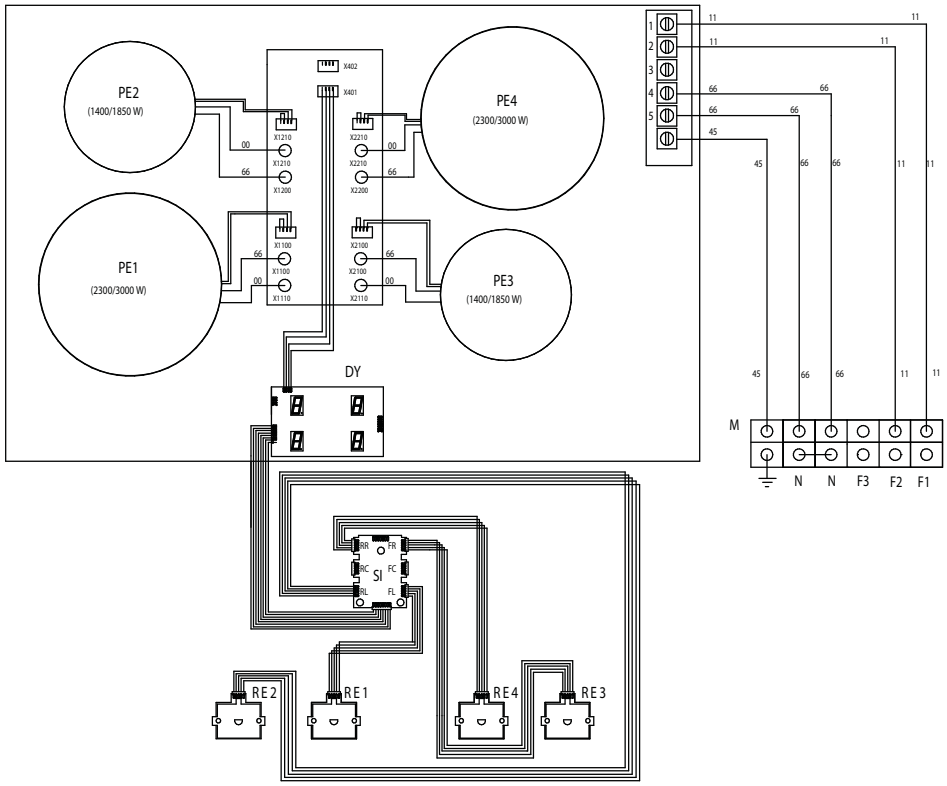

HVI395

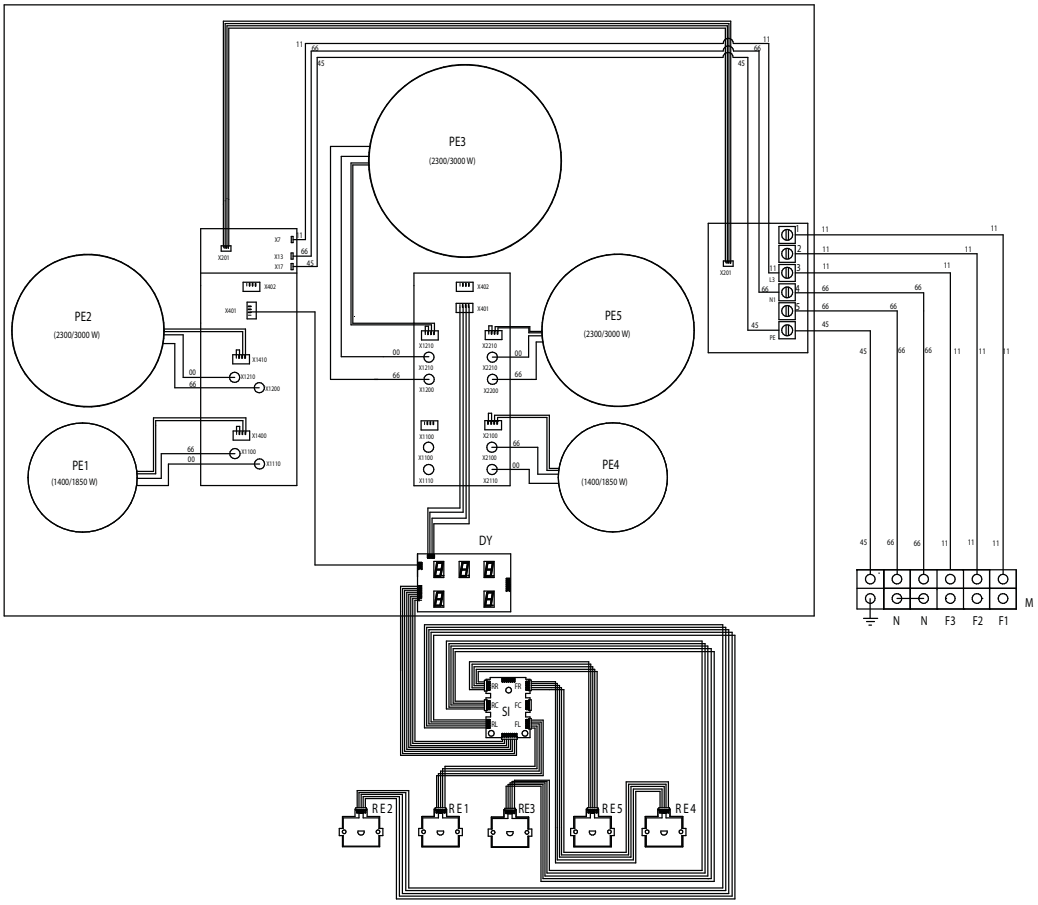

Live,
Cook,
Love.

ilve.com

ILVE S.p.A Via Antoniana, 100 — 35011 — Campodarsego (PD) Italy
T. +39 049 9200990 / Email: mail@ilve.com

cod. EI33961010000EN 43/2025