INDUCTION HOBS

HCBI 382 - 604 - 754 - 906 TC

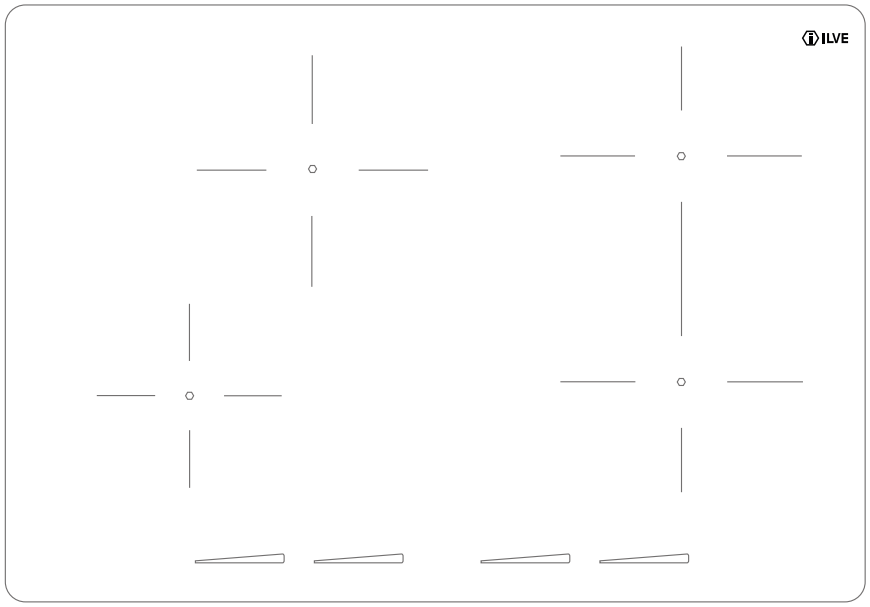

EN | User manual

ILVE

IMPORTANT SAFETY INSTRUCTIONS

WARNING

The appliance must be installed by authorized personnel. The installer is not responsible for any damage caused by incorrect electrical connections.

1. The installation of the induction hob must be carried out by qualified personnel and in accordance with current regulations. Ensure that live parts under the built-in unit are properly protected. The wiring diagram is shown on the label near the terminal block. In case of direct connection to the mains, a double-pole switch with a minimum contact gap of 3 mm must be installed. The connection to the electrical supply must be separated by an appropriate disconnection device: switch or fuse.
2. The hob must be installed in a suitable built-in housing (see chapter Installation).
3. The appliance must be used exclusively for cooking food and not for any other domestic or industrial uses.
4. Remove any stickers from the glass surface of the hob.
5. Do not modify or alter the appliance.
6. Do not use the cooktop as a work surface.
7. The appliance must be connected and installed in accordance with local regulations.
8. Do not use extension cords for the connection.
9. The appliance cannot be used with cookware that is not suitable for induction cooking.
10. This appliance can be used by children aged 8 years and above and by persons with reduced physical, sensory or mental capabilities or lack of experience and knowledge if they are supervised or have been instructed concerning the use of the appliance in a safe way and understand the hazards involved.
11. Warning: this appliance and its accessible parts become very hot during use. Keep children under 8 years of age away unless continuously supervised. Children must be supervised to ensure they do not play with the appliance.
12. After use, switch off the cooking zone using its control device and do not rely on the pan detection system.
13. WARNING: unattended cooking with fat or oil on the cooktop can be dangerous and may result in fire.
14. Warning: in case of fire, never attempt to extinguish it with water. Switch off the appliance and smother the flames with a lid or a fire blanket.
15. Cleaning and maintenance must not be carried out by children without supervision.
16. Ensure that the power cable does not come into contact with the glass surface or with cookware.
17. Magnetic objects such as credit cards, floppy disks, and calculators must not be placed near the appliance while it is operating.
18. Do not use any type of metal object except cookware suitable for induction.
19. Fire hazard: do not store items on the cooktop and do not cover the cooking zone with flammable materials.
20. The appliance must be operated by responsible individuals.
21. Metallic objects such as knives, spoons, forks, or lids should not be placed on the cooktop surface as they may become hot.
22. Warning: if the glass surface is cracked, switch off the appliance to avoid the risk of electric shock.
23. **The appliance is not designed to be operated with an external timer or a remote-control system.**
24. **Do not use steam cleaning appliances to clean the cooktop.**
25. **The cooking process must be supervised. A short cooking process must be continuously monitored.**

Precautions to avoid damaging the appliance

1. The product must be cleaned following the instructions provided in the Cleaning and Maintenance chapter.
2. Unsuitable cookware may damage the surface of the hob.
3. Do not use abrasive materials for cleaning.
4. Avoid dropping heavy objects onto the hob surface.
5. Place cookware gently on the cooktop.
6. Ensure that the appliance ventilation complies with the user manual.
7. Do not place empty pots or pans on the cooktop.
8. Sugar, synthetic materials, or aluminum must not come into contact with the cooking zones.
9. Avoid placing hot containers on the control panel.
10. If a drawer or panel is located beneath the hob, it must be at least 2 cm away from the underside of the appliance to ensure proper ventilation.
11. Do not store flammable objects inside the drawer located under the hob.

IMPORTANT SAFETY INSTRUCTIONS

In case of malfunction

1. In the event of a malfunction, switch off and disconnect the appliance.
2. If the glass surface is cracked or broken, disconnect the appliance and contact an authorized service center.
3. Any repairs must be carried out by authorized personnel.
4. THE SWITCH MUST BE ACCESSIBLE AFTER INSTALLATION

Precautions

1. Ensure that the pot is centered on the cooking zone. Ideally, the base of the pot should cover the entire cooking zone.
2. The magnetic field generated by the induction hob may affect the proper functioning of pacemakers. It is recommended to consult your physician for detailed information.
3. Avoid contact between cooking zones and synthetic or aluminum materials.
4. This appliance, in compliance with the European WEEE Directive (2012/19/EU), must be disposed of separately from other waste at the end of its life cycle. This appliance does not contain substances in quantities considered hazardous to health or the environment, in accordance with current European directives.
5. ⚠ Electrical voltage: risk of electric shock. Disconnect the main power supply. Detach the power cable from the electrical system.

Disposal

1. To dispose of the appliance: cut the power supply cable and remove it. Deliver the appliance to appropriate collection centers for electrical and electronic waste, or return it to the retailer upon the purchase of an equivalent appliance, on a one-for-one basis.
2. The packaging of the appliance is made using non-polluting and recyclable materials. Dispose of the packaging materials at suitable recycling collection points.
3. Plastic packaging: choking hazard. Do not leave the packaging or any of its parts unattended. Do not allow children to play with the plastic bags from the packaging.

INSTRUCTIONS FOR USE

Use of the induction hob

Cooking Zones

HCBI 604 TC

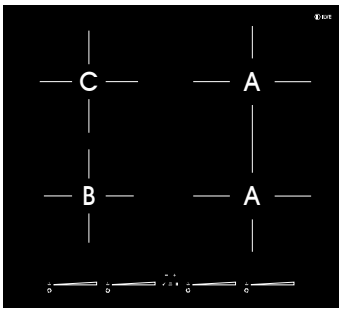

HCBI 754 TC

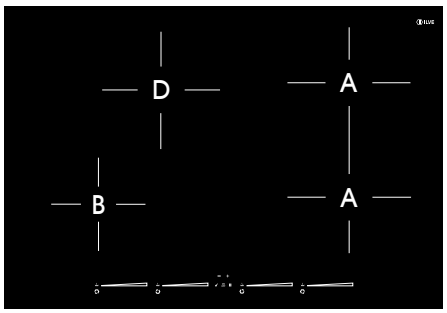

HCBI 382 TC

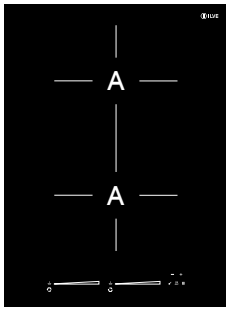

HCBI 906 TC

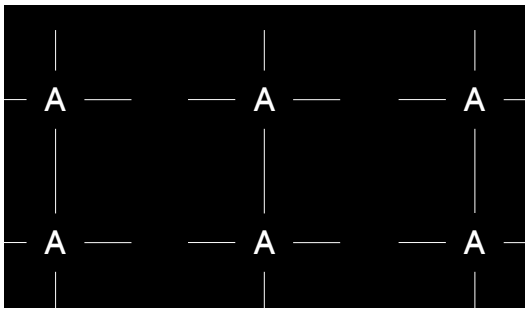

ZONE	A	B	C	D
Diameter (mm)	210 X 190	ø 145	ø 160	ø 200
Minimum pot diameter (mm)	ø 110 single ø 230 bridge	ø 90	ø 90	ø 110
Power (watt)	2100 single 1500 bridge	1400	1400	2300
Booster (watt)	3000 single 1850 bridge	1850	2100	3000

Induction

Under each cooking zone, there is a coil that generates, when a pot is placed on it, a variable electromagnetic field, producing eddy currents on the bottom of the pot made of ferromagnetic material. The end result is the heating of the pot's bottom placed on the cooking zone. The type of cookware material is fundamental:

- **Suitable materials:** steel, enameled steel, cast iron, ferromagnetic steel, aluminum with a ferromagnetic base (this can be tested with a magnet);
- **Unsuitable materials:** aluminum and steel without a ferromagnetic base, copper, ceramic, porcelain, glass, brass.

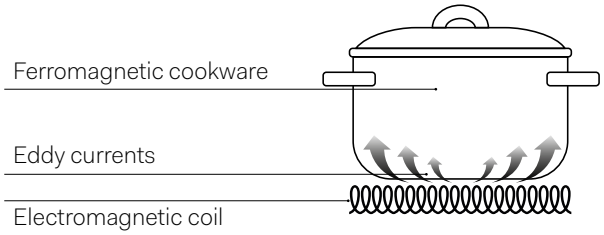

Cookware

To check the compatibility of the cookware, place the pot containing a minimum amount of water on the cooking zone. Select power level "9"; the water should boil within a few seconds.

Some pots may produce a "noise" during cooking. This phenomenon does not originate from the induction hob and does not affect cooking performance. If a pot is unsuitable or if it is not placed on the selected zone, the corresponding display will show the symbol "U".

Cookware dimensions

The cooking zones automatically adjust to the diameter of the pots. However, the base of the pots must have a minimum diameter for correct operation. For maximum efficiency, place the pot in the center of the cooking zone.

INSTRUCTIONS FOR USE
Use of the induction hob

Display

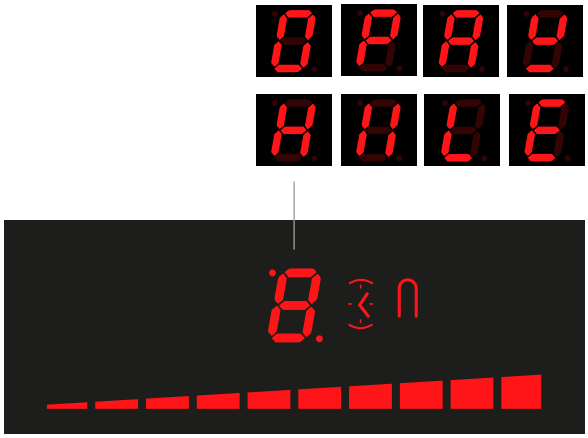

Symbol	Description
0	Cooking zone is active
1-9	Power level – Select cooking level
P	Booster – Cooking zone power boost
A	HEAT-UP function – Automatic initial cooking
U	Pot detection – No pot or unsuitable pot detected
H	Residual heat – Cooking zone is hot
II	Pause
L	Control panel lock
E	Error – Electronic malfunction

Control description

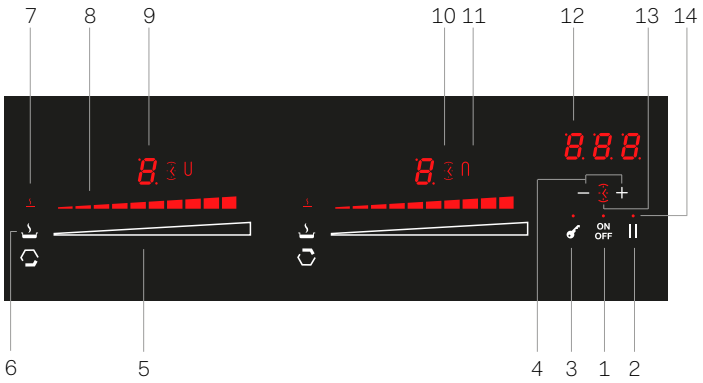

1	ON/OFF power button
2	Pause button
3	Key-lock / Child safety lock button
4	Timer buttons + / -
5	Slider – cooking power adjustment
6	KEEP WARM button – Keep warm function
7	KEEP WARM indicator – Keep warm status
8	Cooking power indicator
9	Cooking zone display
10	Cooking zone “Timer” indicator
11	BRIDGE indicator – Cooking zones linked
12	Timer display
13	Countdown indicator
14	Active function indicator

INSTRUCTIONS FOR USE

Use of the induction hob

Standby mode

The appliance enters standby mode after 1 minute of inactivity. Power consumption in standby mode is 0.5 W.

Turning the appliance on

Touch the ON/OFF button and place the pot on the hob. The display corresponding to the cooking zone in use will show "0" indicating the appliance is on. If no command is given after turning on, the appliance will switch off after approximately 10 seconds.

Turning on a cooking zone

After turning on the hob, select the desired cooking zone by using the dedicated slider and slide your finger to set the desired power level from 1 to 9. The power level will be displayed on the corresponding zone's display.

Turning off a cooking zone

A cooking zone can be turned off by pressing the lowest end of the slider or sliding the finger along the slider down to "0." If the turned-off zone is still hot, the letter "H" will alternate with "0" on the display. If the hob is off but the zone is still hot, only a steady "H" will appear on the corresponding zone display. Do not touch the cooking zone or place flammable objects on it.

Switching off all cooking zones

Con più zone di cottura inserite, toccando il tasto **ON/OFF** vengono spente tutte. Il tasto **ON/OFF** non è influenzato dal blocco tastiera attivo. Se le zone risultano ancora calde comparirà sul display delle zone cottura la lettera **"H"** a luce fissa.

BOOSTER Function

The Booster function provides a power boost to the selected cooking zone. It is ideal for heating large quantities of water quickly. To activate it, touch the ON/OFF button. Slide your finger on the slider of the desired zone to the maximum level. The symbol "P" will appear on the display, and the Booster function will be active. The Booster function lasts a maximum of 5 minutes.

BRIDGE Function (cooking zone linking)

It is possible to combine the two cooking zones marked with the letter A vertically (see section "Cooking Zones"). Turn on the hob, then simultaneously press any point on the sliders of both zones. The displays labeled "BRIDGE" will show the icons "**U**" and "**∩**", and on one of the selected zones' displays, "0" will light up. At this point, slide the slider to set the desired power level. In this mode, the booster function cannot be activated.

HEAT-UP Function (automatic heating)

The HEAT-UP automatic heating function can be activated on all zones from power level 1 to level 8. When this function is active, the cooking zone power is increased to 100% for a period depending on the selected power level. At the end of this period, the power is automatically reduced to the set level. To activate the automatic heating function, select the power level with the slider and hold the position for 3 seconds. The display will show the letter "A" alternating with the previously selected power level. The automatic heating function is now activated.

KEEP WARM Function (maintains temperature at 42°C)

The KEEP WARM function is used to keep already cooked food warm. Each cooking zone has a dedicated button. By touching the dedicated button the icon appears on the display, and the temperature at the bottom and inside the pot is limited to 42°C. The function can be turned off by touching the button again or by adjusting the slider of the cooking zone. The maximum duration of the function is 2 hours.

Pause

The pause function can be activated when at least one cooking zone is active. Turn on the cooking zones and set the desired power levels. To activate the pause function, touch the **II** "pause" button. The "**II**" symbol will appear on all cooking zone displays. When the pause function is active, all zones will turn off, and any set timers (including the countdown timer) will be paused. The pause function has a maximum duration of 10 minutes; after this time, the function will deactivate and the hob will turn off. The ON/OFF control remains active even during the pause function. To deactivate the function, press the II "pause" button again and slide your finger over the blinking slider. Sliding will reactivate the cooking zones at the previously set power levels (if this is not done within 10 seconds, the pause function will remain active).

Function lock

To prevent accidental changes to the selected settings during cooking, the control functions can be locked, except for the ON/OFF button. To activate the function, touch the key button for 2 seconds. The lock is indicated by the illumination of an indicator light above the key button. To unlock the functions, touch the key button again for 2 seconds.

INSTRUCTIONS FOR USE

Use of the induction hob

KEY-LOCK Function

After turning on the hob, the "KEY-LOCK" or "child safety lock" function can be activated. To enable this function, simultaneously touch the key 🔑 and II "pause" buttons, then touch only the key button 🔑. The appearance of the "L" symbol on all displays indicates that the function is active: all cooking zones are off and cannot be accidentally switched on. To deactivate the function, simultaneously touch the key 🔑 and II "pause" buttons, then touch only the II "pause" button.

Timer function

The Timer function allows you to set a cooking duration from 10 seconds to 1 hour and 59 minutes for each cooking zone. A different duration can be set for each zone. After turning on the hob and selecting a cooking zone, press the "+/–" buttons simultaneously to activate the timer. "0.00" will appear on the timer display, and the selected cooking zone display will show the symbol "timer active". Use the "+/–" buttons to set the cooking time (if no command is given within 10 seconds, the timer display will turn off). If multiple cooking zones have been programmed, the display will show the shortest remaining time. Once the set time has elapsed, the corresponding zone will switch off and an acoustic signal will sound (pressing the "+" or "–" button will silence the signal; if not silenced, it will remain active for 2 minutes). If the cooking zone is still hot when turned off, the "H" symbol will appear on the display. To set a value lower than 1 minute: activate the timer, touch the "+" button once (the starting value 1.00 will appear), then use the "–" button to select the desired value in seconds.

Countdown timer function

The countdown timer is independent of the cooking zones. Once activated, the countdown remains active even when the hob is off. After turning on the hob, simultaneously touch the "+/–" buttons (the timer display will show "0.00" and the "countdown active" icon will appear). By then touching the "+" button, a time between 10 seconds and 1 hour and 59 minutes can be set. To reset the function, turn the hob on using the ON/OFF button, touch the "+/–" buttons simultaneously, and then touch the "–" button to bring the timer back to "0."

Recall function

After switching off the hob, it is possible to recall the last used settings. Turn on the hob using the ON/OFF button, then press the II "pause" button before the indicator stops flashing. The recall function can be reactivated even if the "Function Lock" or "KEY-LOCK" functions were enabled.

Pan detection

Pan detection ensures correct operation. The induction hob does not work if:

- The pan is not placed on the activated cooking zone, or the pan is not suitable for induction cooking. In these cases, the symbol "U" appears on the display.
- If the pan is removed during cooking, the symbol "U" appears on the display. If the pan is then placed back on the same cooking zone, the hob resumes operation at the previously set power level.

Unintentional start protection

In the event of accidental activation, if no key is pressed, the hob will switch off after 10 seconds. Accidental splashes of water on the control panel are not detected by the touch sensors. The ON/OFF button has priority over all other controls.

Operating time limitation

In the event of accidental activation, if no key is pressed, the hob will switch off after 10 seconds. Accidental splashes of water on the control panel are not detected by the touch sensors. The ON/OFF button has priority over all other controls.

POWER LEVEL	DURATION (hours)	HEAT-UP (sec)
KEEP WARM function 42°C	2	-
1	8,5	40
2	6,5	72
3	5	120
4	4	176
5	3,5	256
6	2	432
7	2	120
8	1,5	192
9	1,5	-
P	5 min	-

INSTRUCTIONS FOR USE
Use of the induction hob

Power management

When the BOOSTER function is used, power management operates as follows: the most recently set power level takes priority over the others. To avoid exceeding the maximum usable power, the electronics automatically reduce the power of the other zones by lowering them to a lower level. During this phase, the "cooking zone display" will flash for 3 seconds and then stabilize at the power level managed by the electronics.

Cooking zone overheating

If a cooking zone overheats excessively during operation, the power is automatically reduced and the display shows the new adjusted level. At this point, it is only possible to lower the power level. Once the cooking zone temperature drops below the critical threshold, cooking can be resumed normally.

Ventilation

The hob ventilation system is fully automatic. The cooling fan for the electronics, located beneath the hob, runs at low speed up to a certain temperature level of the electronics. When the hob is used for an extended period, the cooling fan speed increases. Once the electronics are cool, the fan automatically shuts off.

Recommended cooking settings (purely indicative values)

When multiple cooking zones are active, touching the ON/OFF button will switch them all off. The ON/OFF button is not affected by the active key lock. If the zones are still hot, the letter "H" will appear steadily on the cooking zone displays.

POWER LEVEL	TYPE OF COOKING
1-2	Melt butter, chocolate, etc.
2-3	Heat small quantities of liquids, keep food warm, prepare sauces.
4-5	Heat solid foods, defrost frozen foods, omelettes with 2-3 eggs, fruits and legumes.
5-6	Cook meat and fish, legumes in sauce, dishes with water, jam preparation.
6-7	Roast meat or fish, steaks, liver, eggs.
8-9	Boil large quantities of water, fry potatoes, etc.
P	Boil large quantities of water.

CLEANING AND MAINTENANCE

WARNING

- At first use, clean the surface of the cooktop with a damp cloth.
- Before performing any cleaning operation, disconnect the appliance from the electrical power supply.
- The work surface must be cleaned only when cooled down. Risk of burns.
- Remove light stains with a damp cloth and then dry with a dry cloth.
- Do not clean with corrosive or abrasive products.
- Do not use any objects that could damage the glass-ceramic cooktop.
- Make sure the bottom of the pot is dry and clean, and that the glass surface is free of dust. Sliding the pot may scratch the glass.
- Immediately remove residues of sugar, jelly, jam to prevent damage to the glass.

TROUBLESHOOTING

Induction hob malfunction

FAULTS	CAUSES
The appliance and cooking zone do not turn on	- The hob has not been correctly connected to the electrical network - The protective fuse is blown - The KEY-LOCK function is activated
The symbol “U” appears on the display	- The pot is not placed on the cooking zone - The pot is not compatible with induction - The diameter of the pot’s base is too small - Disconnect the hob from the electrical supply - Contact the authorized service center
The symbol “E” appears on the display	- The electronic system is defective - Disconnect the hob from the electrical supply - Contact the authorized service center
The cooking zones do not work	- The safety system is active - The pot is empty and the bottom has overheated
If the ventilation remains on when the hob is off	- This is not a malfunction. The fan continues to operate to protect the electronics. - The automatic ventilation will stop automatically.

INSTALLATION

Installation regulations

The following instructions are intended for the qualified person responsible for installing the appliance, adjusting it, and performing technical maintenance, ensuring that these operations are carried out correctly and in compliance with current standards.

IMPORTANT: Any adjustment, maintenance, etc., must be performed after disconnecting the appliance from the power supply.

This equipment complies with the following directives:

DIRECTIVE 2002/96/EC

LOW VOLTAGE DIRECTIVE 2014/35/EU

ELECTROMAGNETIC COMPATIBILITY DIRECTIVE 2014/30/EU

REGULATION No. 1935/2004 (contact with food)

Installation must be carried out in a professional manner and in full compliance with the applicable electrical installation regulations. Otherwise, the Manufacturer declines all responsibility. This manual also includes the electrical diagram of your appliance.

Built-in installation

Fixing to the cabinet is done with the appropriate clips, which must be mounted on the steel frame of the hob.

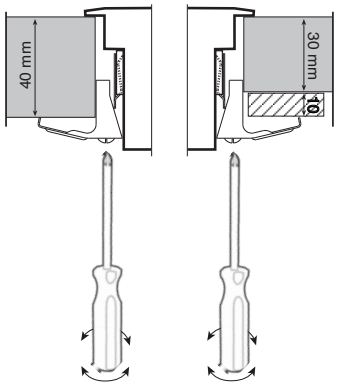

Installation instructions

The dimensions of the installation cavity are shown in the table below. The gasket supplied with the hob is sufficient to cover the perimeter of the cut-out hole. Its adhesive is resistant up to a temperature of 100 °C. The hob is classified as class "Y". For an optimal installation of the hob, it is recommended to leave the adjacent sides free. However, the installation of only one side wall and one rear wall is allowed. The walls must be kept at a minimum distance of 50 mm.If the installation cavity is exposed to possible water infiltration, it must be protected, especially on the edge of the cut-out hole, with paint. Ensure there is a 20 mm gap beneath the hob base to guarantee proper ventilation. Ensure that there is at least a 5 mm gap between the worktop and the upper edge of any drawer or oven underneath to allow air to escape. Do not place any flammable objects inside the drawer located beneath the hob. The distance between the hob and the extractor hood must comply with the hood manufacturer's instructions. If such instructions are not available, maintain a minimum distance of 760 mm. After installation, the connection cable must not be subjected to any traction stress. Installation of the hob on mobile environments (e.g., boats) must be carried out by specialized personnel.

	GLASS DIMENSIONS (MM)	CUT-OUT DIMENSIONS (MM)
HCBI 382 TC	378 X 518	310 X 490
HCBI 604 TC	598 X 518	560 X 490
HCBI 754 TC	748 X 518	720 X 490
HCBI 906 TC	898 X 518	860 X 490

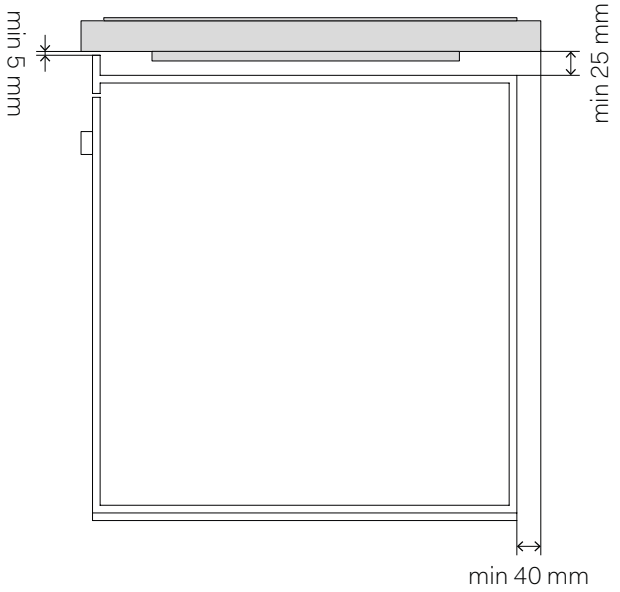

INSTALLATION

Electrical connection

The installation of the induction cooktop must be carried out by qualified personnel and in compliance with current regulations. Ensure that live parts beneath the cut-out are properly protected. The wiring diagram is provided on the label near the terminal block. In the case of direct connection to the mains, a double-pole switch with a minimum contact gap of 3 mm must be installed. The electrical connection to the mains must be protected by an appropriate disconnection device such as a switch or fuse.

- Always connect the earth (ground) cable.
- Follow the wiring diagram carefully.
- The terminal block is located underneath the cooktop at the rear side.
- Use a screwdriver to open the terminal block cover.
- The yellow-green earth conductor must never be interrupted, not even by the switch. The power cable must be installed so that it does not come into contact with surfaces exceeding 50°C above ambient temperature. If the power cable needs to be replaced, contact the authorized service center.

Cable connection to the cooktop

For the different types of connection, use the appropriate jumpers located inside the terminal block:

HCBI 382 TC

- SINGLE-PHASE: connect the live wire to terminal 1. Neutral: connect the neutral wire to terminal 4.
- GROUND: connect the ground wire to the dedicated terminal ⏚

POWER SUPPLY	CONNECTIONS	CABLE SIZE	CABLE TYPE
220/230/240V a.c. 1P+N 50/60Hz	1 phase + N	3 x 1,5 mm²	H05RR

HCBI 604 TC - HCBI 754 TC

- SINGLE-PHASE: Connect the supplied jumper between terminals 1 and 2, and between terminals 4 and 5. The neutral (N) must be connected to terminal 4 or 5.
- 2-PHASE + N: Connect the supplied jumper between terminals 4 and 5. The neutral (N) must be connected to terminal 4 or 5. One phase must be connected to terminal 1, and the second phase to terminal 2.
- EARTH: The earth wire must be connected to the dedicated terminal ⏚

POWER SUPPLY	CONNECTIONS	CABLE SIZE	CABLE TYPE
220/230/240V a.c. 1P+N 50/60Hz	1 phase + N	3 x 6 mm²	H05RR
380/400/415V a.c. 2P+N 50/60Hz	2 phase + N	4 x 2,5 mm2	H05RR

HCBI 906 TC

- 3-PHASE + N: Connect the supplied jumper between terminals 4 and 5. The neutral (N) must be connected to terminal 4 or 5. The three phases must be connected to terminals 1, 2, and 3.
- 2-PHASE + N: Connect one supplied jumper between terminals 4 and 5, and another jumper between terminals 2 and 3. The neutral (N) must be connected to terminal 4 or 5. One phase must be connected to terminal 1, and the second phase to terminal 2 or 3.
- EARTH: The earth wire must be connected to the dedicated terminal ⏚

POWER SUPPLY	CONNECTIONS	CABLE SIZE	CABLE TYPE
380/400/415V a.c. 3P+N 50/60Hz	3 phase + N	5 x 2,5 mm²	H05RR
380/400/415V a.c. 3P+N 50/60Hz	2 phase + N	4 x 4 mm²	H05RR

Connect the power cable to the left module.

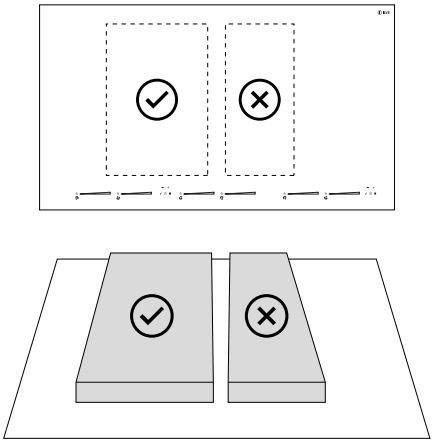

INSTALLATION
Wiring diagrams

Key	
00	Black
11	Brown
45	Yellow-green
66	Blue
DY	Display
F	Phase
M	Terminal block
N	Neutral
PE	Electric hotplate

HCBI 382 TC

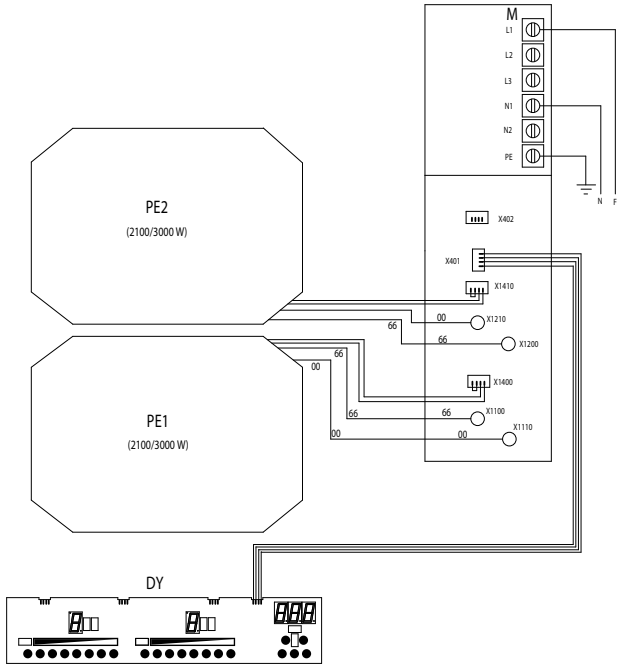

HCBI 754 TC

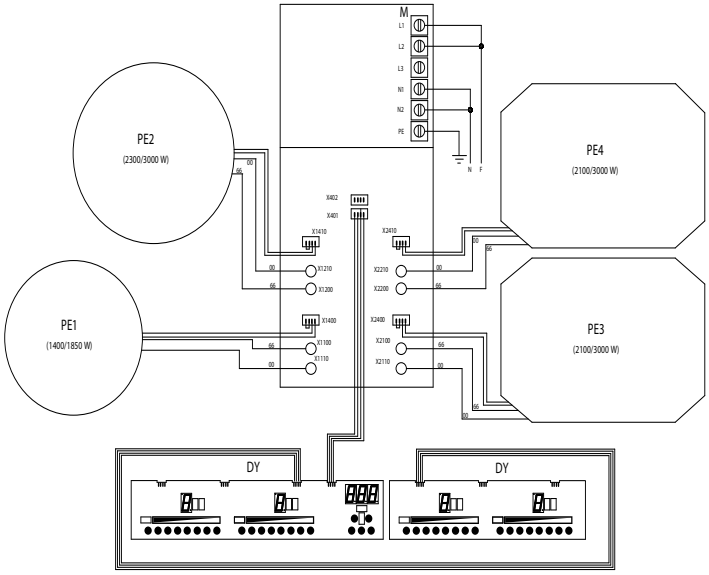

HCBI 604 TC

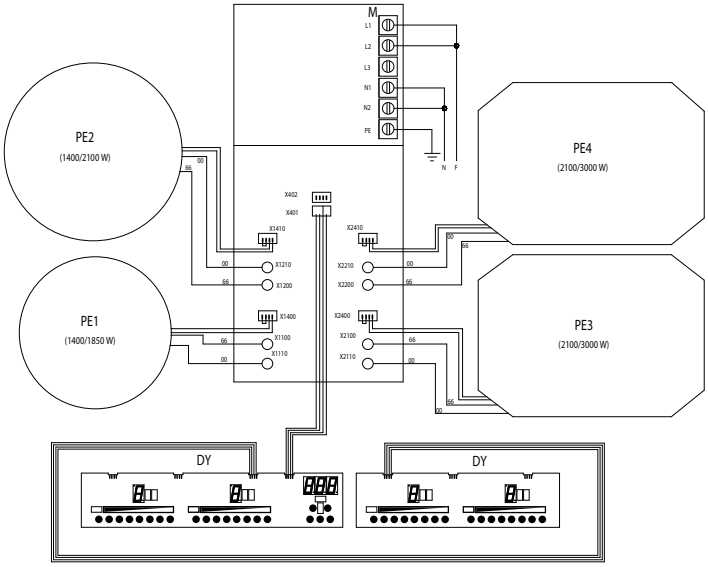

INSTALLATION
Wiring diagrams

HCBI 906 TC

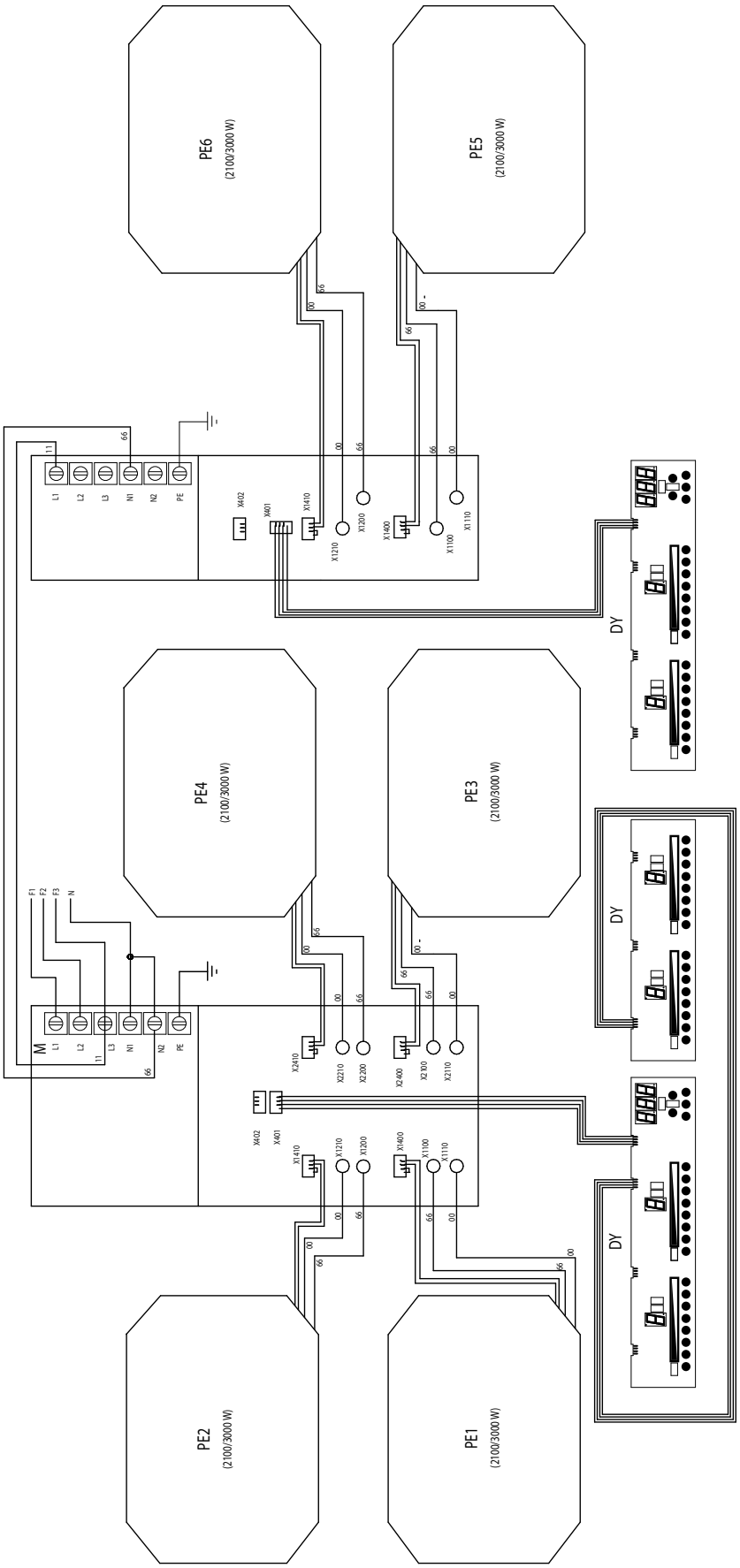

Live,
Cook,
Love.

ilve.com

ILVE S.p.A Via Antoniana, 100 — 35011 — Campodarsego (PD) Italy
T. +39 049 9200990 / Email: mail@ilve.com

cod. EI33960690000EN 43/2025