EN

HOODS
MAJESTIC

AM70 - AM76 - AM90 - AM100 - AM120 - AM150

USER – Use and maintenance

INSTALLER - Installation manual

ILVE

cod. EI33960320000EN
42/2023

INDEX

USER

04 Useful information

06 Important safety warning

08 Instructions for use

11 Cleaning

13 Periods of inactivity

13 Ordinary maintenance - replacement of the spotlight

INSTALLER

14 Important safety warnings

17 Installation

USEFUL INFORMATION

DEAR CUSTOMER

Thank you for choosing our equipment!

Our hoods are capable of efficiently extracting fumes and steam generated by cooking food from domestic environments.

This booklet contains all the necessary information for using and maintaining the equipment. It will guide you through starting using the hood quickly and without difficulty. We therefore recommend that you read it carefully before use, and that you store it carefully for future reference. We remain at your full disposal for any further information that you may require, or if you have any problems in understanding any contents of this booklet.

ILVE S.p.a.
Via Antoniana, 100
35011 Campodarsego (PD) Italy
tel. +39 049 9200990 - fax +39 049 9201010
SEND MAIL: mail@ilve.com

LEGEND

ICON

Read this manual carefully before installing or using the equipment.

The manual contains some warning or danger symbols:



Danger! Situation of immediate danger or dangerous situation that might cause injuries or death.



Read the instruction manual



Useful advice and information



Reference to another chapter

ATTENTION:

The Manufacturer reserves the right to make improving modifications to the equipment or accessories at any time. Partial reproduction without the Manufacturer's authorization is forbidden. The measurements given are indicative and not binding.

IMPORTANT SAFETY WARNINGS

- This booklet contains important information about the use and maintenance of your equipment and is an integral and essential part of the product. Please read this booklet carefully before proceeding with any operations, in order to protect your safety and avoid damaging the product.

- Store the booklet safely for further consultation, and give it to the new owner if you sell the equipment, since the information therein is addressed to the purchaser and all the people that, one way or another, use and maintain the product.

- ILVE S.p.a. (hereinafter referred to as "the Manufacturer") denies any and all liability due to the failure to comply with the instructions below, including any damage caused from misuse and unauthorized changes in the product, as well as the use of non-genuine spare parts supplied by ILVE S.p.a.

- The equipment may be used by children 8 years of age or older, and by individuals with reduced physical, sensory or mental capabilities, or without the necessary level of experience or knowledge, provided that they are supervised, or only after they have been fully instructed on the safe use of the equipment and made fully aware of any danger.

- The equipment is only intended for the extraction of cooking fumes from a domestic, non professional, environment. Any other use is considered improper use, can cause damage to people, property and animals, and shall relieve the Manufacturer from all responsibility.



- If the equipment does not work, or functional or structural alterations are noted, disconnect it from the power mains and contact a service centre authorised by the manufacturer. Do not attempt any repairs yourself. Always request that original spare parts are used.

- Do not touch the hood with wet or dirty hands, or while barefoot.

- When not in use, check that all electric components (lights, suction fan) are switched off.

- Check fryers during use: overheated oil may catch fire.

- Do not ignite open flames or cook flambé foods under the hood.

- Never use the hood without the anti-grease filters supplied: this could lead to an accumulation of fat and dirt, which could severely harm the operational parts of the product, primarily the blower.

IMPORTANT SAFETY WARNINGS



Guidelines for the routine maintenance of the range hood

- Disconnect the electric power supply.
- Always wear appropriate personal protective equipment (e.g. gloves, safety footwear, etc.).
- After the surfaces of the hood have COOLED DOWN;
- Always wear appropriate personal protective equipment (i.e., gloves, safety footwear, etc.).
- Failure to follow the instructions or the use of unsuitable cleaning devices may pose a risk of fire and/or damage to the hood or the surrounding objects, so the Manufacturer couldn't be held responsible.
- Regular daily cleaning and maintenance activities should not be performed by children.
- The maximum weight of any objects placed on top of the hood or attached to the same should not exceed 2 kg.
- Do not pull, push or hang on the equipment, neither use the hood as a support for heavy objects or cabinet and other appliances.

INSTRUCTIONS FOR USE

Product's operation
The hood extract fumes and steam generated during cooking from the environment, channelling them through metal filters that must be regularly removed and washed. And then, depending on the type of installation, fumes and steam:



are driven outside from the building through a drain pipe: this model does not require the use of carbon filters (ducting or external drain cooker hood - **Fig. 1**);



are funneled through one or more carbon filters (usually one or two) to be purified: the clean air is then blown into the room thanks to the grid holes placed on the top of the hood's chimney (filtering or internal recirculation cooker hood - **Fig. 2**).

Operating instructions
The hood must be switched on at least a couple of minutes before starting to cook, to promote the suction of fumes and steam. After finishing cooking, leave the hood in operation for an extra few minutes: in this case, it may be appropriate to activate the "Timer" function, which automatically switches the hood off after 10 minutes (see 'Control panel' page 9).



The page that follows shows how to use the control panel.

What speed should I use?
The unit operates at three different speeds:
speed 1: purifies the air whilst limiting electricity consumption;
speed 2: normal conditions of use (e.g. steam suction)
speed 3: for the elimination of particularly intense fumes and smells (e.g: when frying or grilling).

When should the filters be washed or replaced?
The hood has two types of filters:

- **metal filters:** these must be removed and washed at least once a month. For the cleaning procedure refer to chapter "CLEANING" on page 11.
- **active carbon filter:** this is only found in internal air recirculation models (**Fig. 2**), and must be removed and replaced approximately every 3-4 months, depending on use.

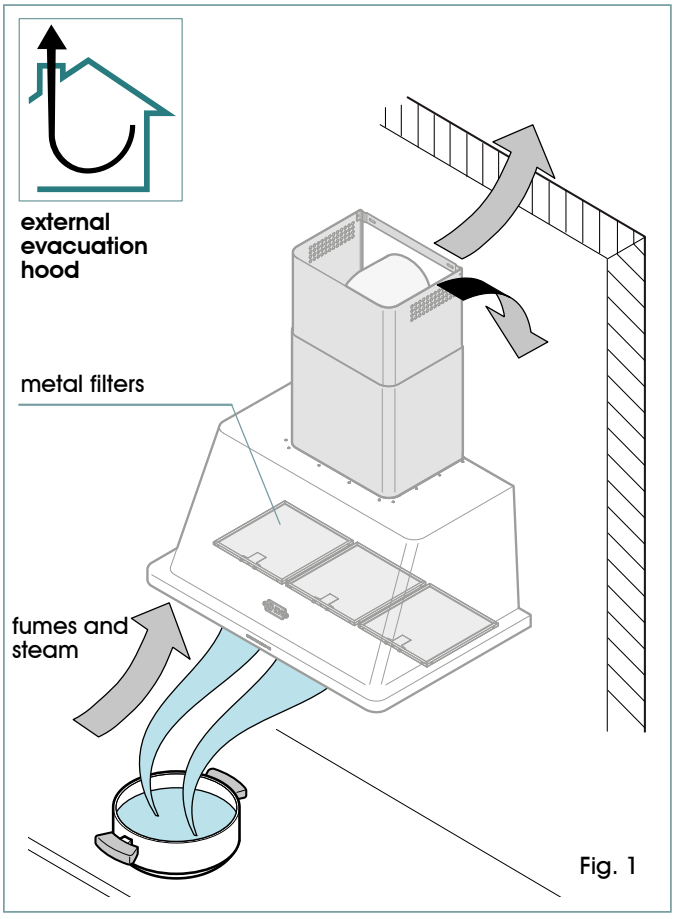

Fig. 1

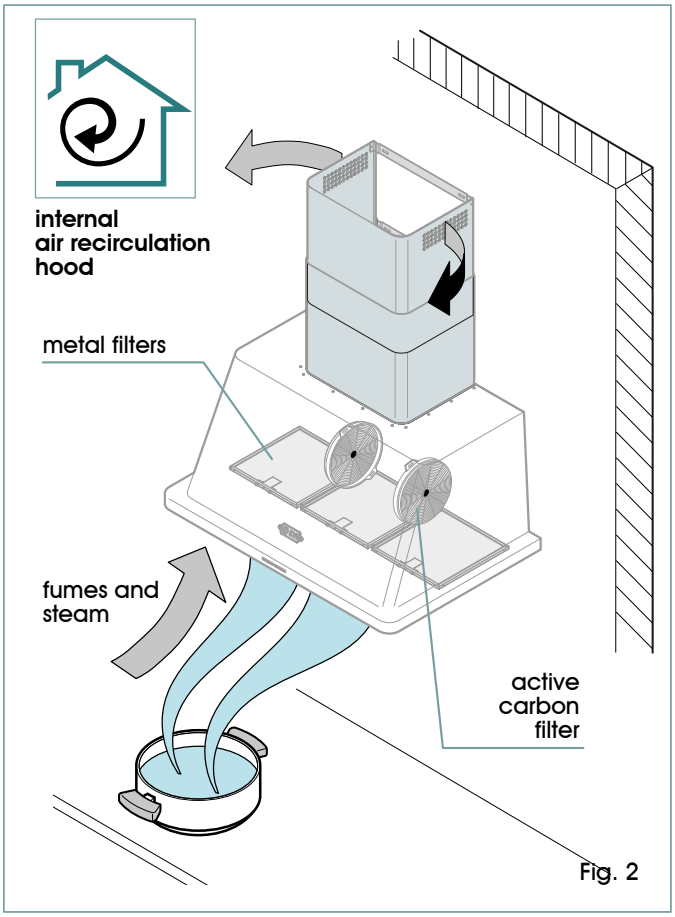

Fig. 2

INSTRUCTIONS FOR USE

CONTROL PANEL

Fig. 3

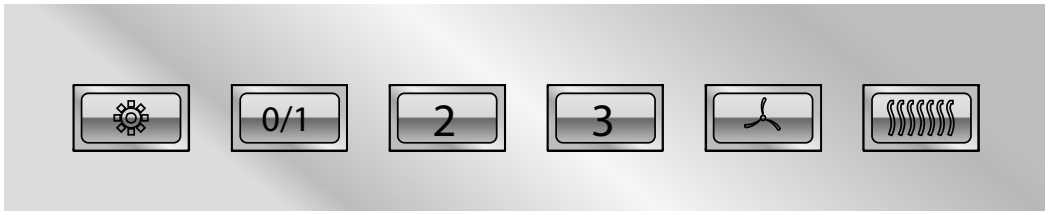

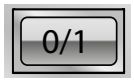

ON-OFF
Turns on and off the engine at speed 1.

Speed 1
Purifies the air whilst limiting electricity consumption.

24-hour air recirculation
Hold down the "0/1" button for 7 seconds to turn the air recirculation program on or off (alternating operations for 24 hours: off 20 minutes and 5 minutes in first speed).

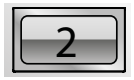

Speed 2
Normal conditions of use.

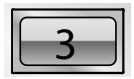

Speed 3
For the elimination of particularly intense fumes and smells (e.g: when frying or grilling).

Dynamic speed
Starts the motor at maximum speed for 5 minutes and then automatically returns to speed 3.

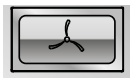

Auto switch-off
To activate the auto switch-off, the hood must be switched on and then the "light control" key must be pressed for 5 seconds until all the LEDs begin to flash, by subsequently pressing one of the keys (0/1, 2, 3,) the auto switch-off time can be programmed which will differ according to the key pressed:
0/1 = 5', 2 = 10', 3 = 15', = 20'. During the auto shut-off time, it is possible to change the set speed. During the auto shut-off, the LED corresponding to the chosen time flashes.

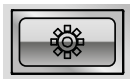

Light button
Turns the light on and off.

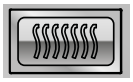

Infrared lamp control
Press the key once to turn on the left lamp
Press the key twice to turn on the right lamp
Press the key 3 times to turn off the lamps



Filter timer
After 30 hours of hood operation, when the hood is switched off, all the LEDs will light up with a fixed light for 30 sec. to advise the necessary cleaning of the aluminium filters. The key, held down for a long time with the extractor off, will reset the timer. If this key is not pressed, the same operation will come up once the hood is switched off again. This procedure will be repeated for the next 30 hours until it reaches 120 hours of operation. At the end of 120 hours, when the hood is switched off, all the LEDs will flash for the next 30 seconds to remind you to clean the aluminium filters and, if the hood is filtering, to replace the active carbon filters. Once the timer has been reset (still with the key held down for a long time with the extractor off) the whole process will re-occur after the next 30-hours of extraction.

INSTRUCTIONS FOR USE

REMOTE CONTROL



	ON - OFF motor
	ON - OFF lightning
	Increases motor speed
	Reduces motor speed

Every signal connected to the motor control enables the BLUE LED lights at the same time for half a second. Every control connected to the light enables the red led light for half a second.

Coupling with the remote control of the hood

When enabling the hood (in the first 7 seconds). Push the ⏻ ON-OFF button on the remote control for two seconds. In this way, the remote control will be completed and activated. After the first 7 seconds, the programming of the hood will be tinished and the coupling will be protected from external signals which are not coupled.

CLEANING AND MAINTENANCE

All ordinary maintenance operations must be carried out:
- after disconnecting the electric power supply;
- always wearing appropriate personal protective equipment (e.g.: gloves, etc...).

Failure to follow the instructions, or use of unsuitable products, may pose a risk of fire and/or damage to the equipment or other objects, for which the Manufacturer cannot be held responsible.

When cleaning any of the components or accessories, NEVER use:
- abrasive or powder detergents;
- aggressive or corrosive detergents (e.g. hydrochloric/muriatic or sulphuric acid).
- abrasive or sharp tools (e.g. abrasive sponges, scrapers, steel brushes, etc.);
- water sprays.

STAINLESS STEEL AND OTHER METAL SURFACES

The INSIDE and the OUTSIDE of the hood should be cleaned solely by using a damp cloth with little neutral soap. It is also possible to use a steel specific cleanser, paying attention to the instructions written on the canister or bottle.
To conclude the cleaning operation, rinse using a clean wet sponge or cloth and then use a rag to dry the surface (in case of satin steel, please rub according to the finish pattern).

CONTROL PANEL

Please follow the instructions stated above for metal surfaces.

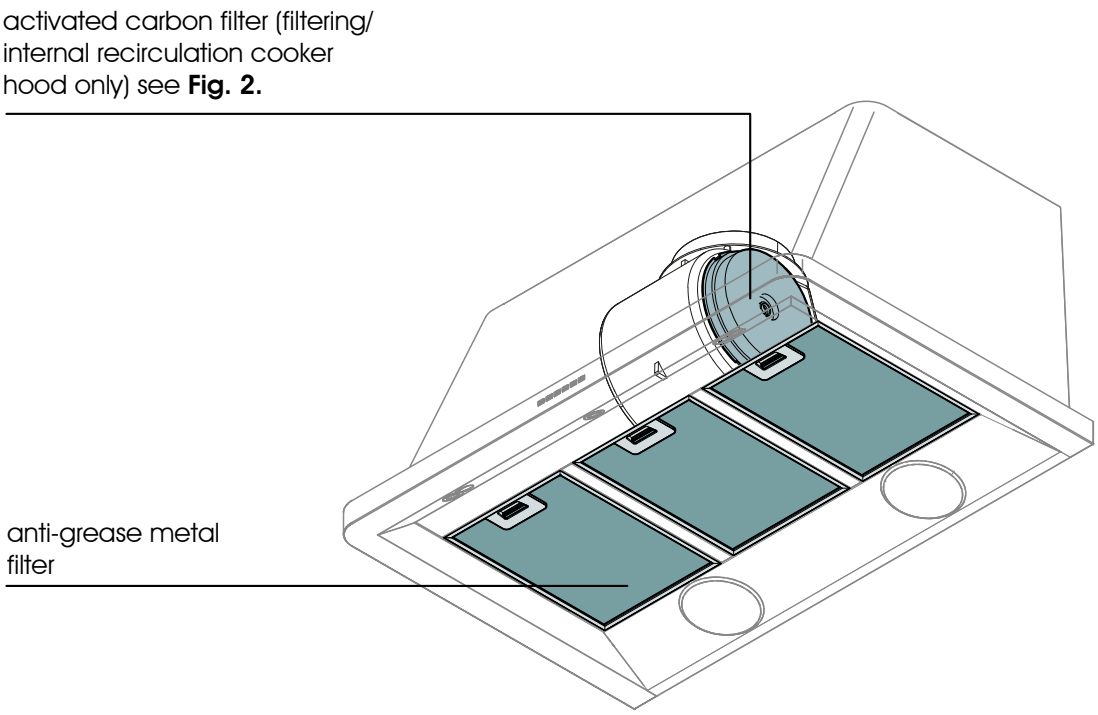

Fig. 4

CLEANING AND MAINTENANCE

GREASE METAL FILTERS

These filters are usually made in aluminium or stainless steel, and their main purpose is to block the particles of oil and fat suspended in the cooking fumes. An excessive accumulation of grease inside the filters could cause unpleasant smells and decrease the suction power of the hood. Please note that accumulated fat is highly flammable: any fire could lead to severe damage to both users and the product.
For these reasons, the anti-grease filters should be washed at least once a month, immersing them into hot water and dish soap for at least one hour. Rinse with plenty of water and wait for the filters to be fully dry before putting them back in place. Please note that the maximum temperature is 70°C/158°F: higher temperature can cause darkening in the metal (please note that this DOES NOT impair the operation of the filter).

For their removal see **Fig. 5**

ACTIVE CARBON FILTERS

These filters cannot be washed or regenerated, and should therefore be replaced every 3 to 4 months, depending on the hood usage. Damp environments, high temperature, soiled anti-grease filters and the use of an induction hob could result into an accelerated decay of the filters. Rounded filters can be removed by counter-clockwise twisting.

For the instructions on carbon and anti-grease filters removal, see **Fig.6**

Internal recirculation hoods have to be used only with active carbon filters installed.

Fig. 5

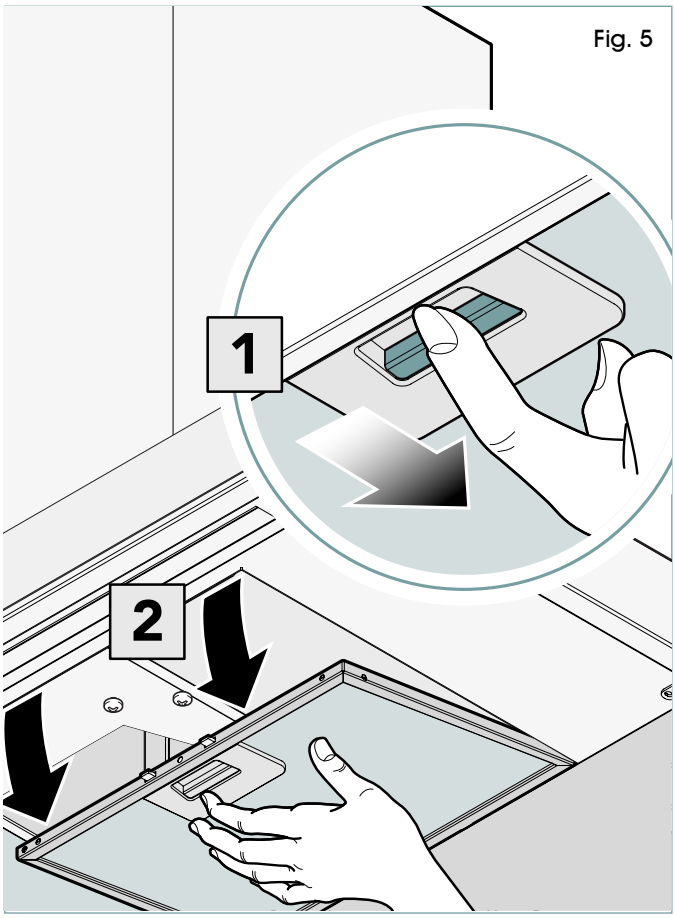

Fig. 6

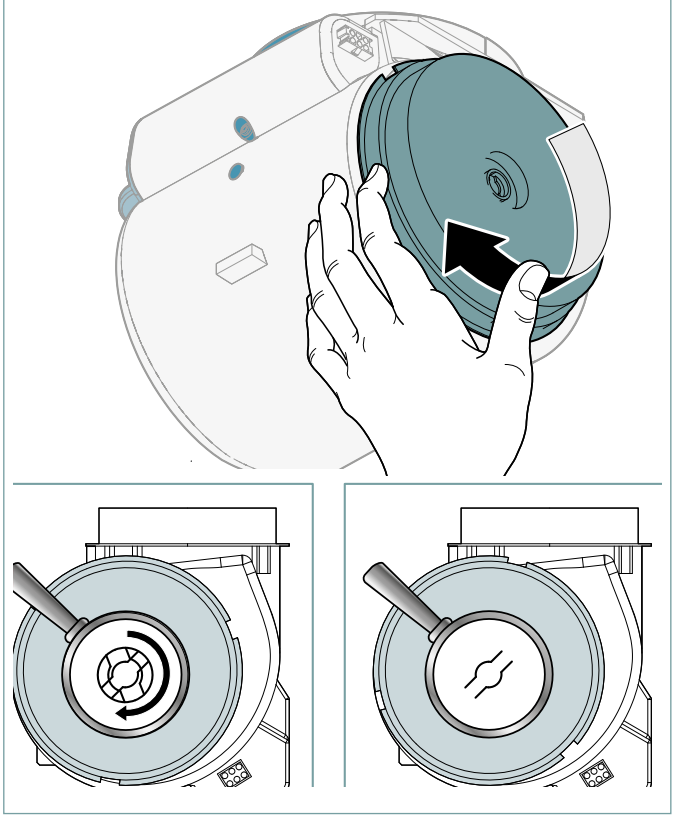

PERIODS OF INACTIVITY

When not using the equipment for extended periods of times:
- disconnect the equipment from the power supply.
- if possible, use a soft cloth to apply a thin layer of Vaseline oil to all stainless steel surfaces.

At first use:
- accurately clean the equipment;
- reconnect the power supply.

ORDINARY MAINTENANCE

Replacement of the spotlight / LED bar

Always make sure that the appliance is disconnected from the power supply

Procedure to follow

1-2. Remove metal filters

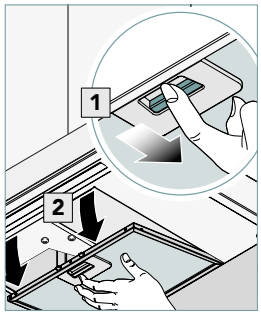

3/a. Push the spotlight from the inside to the outside

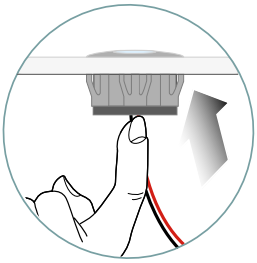

3/b. Press the tabs and push the LED bar outward.

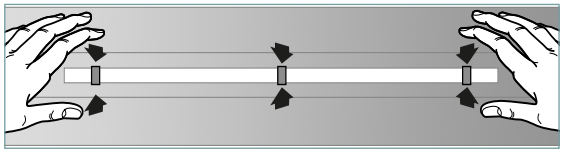

4. Disconnect and replace the entire spotlight

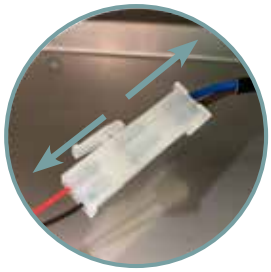

IMPORTANT SAFETY WARNINGS



WARNING: This appliance must be grounded. In the event of an electrical short circuit, grounding reduces the risk of electric shock by providing an escape wire for the electric current. This appliance is equipped with a cord having a grounding wire with a grounding plug.

WARNING: Improper grounding can result in a risk of electric shock.

Do not use an extension cord. If the power supply cord is too short, have a qualified electrician install an outlet near the appliance.



WARNING: TO REDUCE THE RISK OF FIRE, USE ONLY METAL DUCTWORK.



WARNING: TO PROVIDE PROTECTION AGAINST ELECTRIC SHOCK, CONNECT TO PROPERLY GROUNDED OUTLETS ONLY

WARNING: there shall be adequate ventilation of the room when the range hood is used at the same time as appliances burning gas or other fuels (not applicable to appliances that only discharge the air back into the room);

There is a fire risk if cleaning is not carried out in accordance with the instructions;

CAUTION: Accessible parts may become hot when used with cooking appliances.



WARNING: Improper bonding to ground can result in a risk of electric shock.



If the SUPPLY CORD is damaged, it must be replaced by the manufacturer, its ervice agent or similarly qualified persons in order to avoid a hazard.

Before installing the equipment, carefully read the safety instructions on page 6 and the indications provided on page 14.

IMPORTANT SAFETY WARNINGS



The installation and extraordinary maintenance operations must be carried out by qualified personnel, authorized by the Manufacturer, having the necessary product knowledge, and in compliance with the regulations in force in the Country of use regarding the types of systems involved and safety in the workplace.

ATTENTION

- Before connecting the device to the mains, please check that all connection data on the product label (voltage and frequency) match those of the mains (Refer to chapter "How to read product label" on page 27 for further information on the data plate). Please note that any incompatibility could lead to serious damage to the device, so always contact a qualified electrician before installing your hood; check that the systems comply with the regulations in force in the Country of use.
- Always compare the system data with that printed on the data plate.
- Check all the components for integrity and functionality: in case of fault, stop the installation and contact the distributor.
- Do no connect the product to the power main before any other step of the installation is completed.
- Any interventions, tampering or modifications not expressly authorised, not complying with the content of this manual, will void the warranty, and may also cause immediate danger or dangerous situations that may result in injury or even death.
- During the installation of the equipment, anyone not responsible for carrying out installation activities must refrain from transiting or stationing in or nearby the installation area.
- Being potentially hazardous, packaging materials must be kept out of reach of children or animals, and must be correctly disposed of, in accordance with local regulations.
- During the installation activities, always use the required personal protective equipment (e.g. safety shoes) and act with the due level of care and attention.
- The fastening kit (screws and plugs) supplied with the hood can only be used on masonry wall. For installation on other types of walls consider alternative fastening systems,
- Taking into account the strength of the wall itself and the weight of the hood.

IMPORTANT SAFETY WARNINGS

- To perform the installation and ensure the best solidity of the whole framework, always use the the securing devices and the components (e.g. screws, bolts, brackets, etc.) provided with the packaging.

- In order to prevent any loss in the product efficiency and safety of use, the hood should be installed indoor only, sheltered from weathering (i.e., rain, wind) and harsh environmental conditions (dried salt, extreme thermal excursion).

- Do not change the electrical, mechanical and functional structure of the equipment.

- The electric connection socket must be easy to reach even after installation of the equipment.

- Should this not be the case, a general switch must be installed, in order to disconnect the hood from the power supply in case of need.

- The maximum weight of any objects placed on top of the hood or attached to the same should not exceed 2 kg.

- The air must not be discharged into a flue that is used for exhausting fumes from appliances burning gas or other fuels.

- Do not hang on the equipment, and do not use it as a support for other objects or cabinets.

- Any variation or operation in the electrical system should be performed exclusively by a qualified electrician;

- Do not repair the hood by yourself nor replace any of its components, except for the antigrease and the carbon filters. Repairs and other work performed by unqualified personnel will nullify any warranty right on the product, and could lead to product failure and damage to people or property.

INSTALLATION

MOD.	Ø EXIT HOLE (mm)	SUCTION (m3/h)
AM70	150	1000
AM76	150	1000
AM90	150	1000
AM100	150	1000
AM120	150	1000
AM150	150	1000

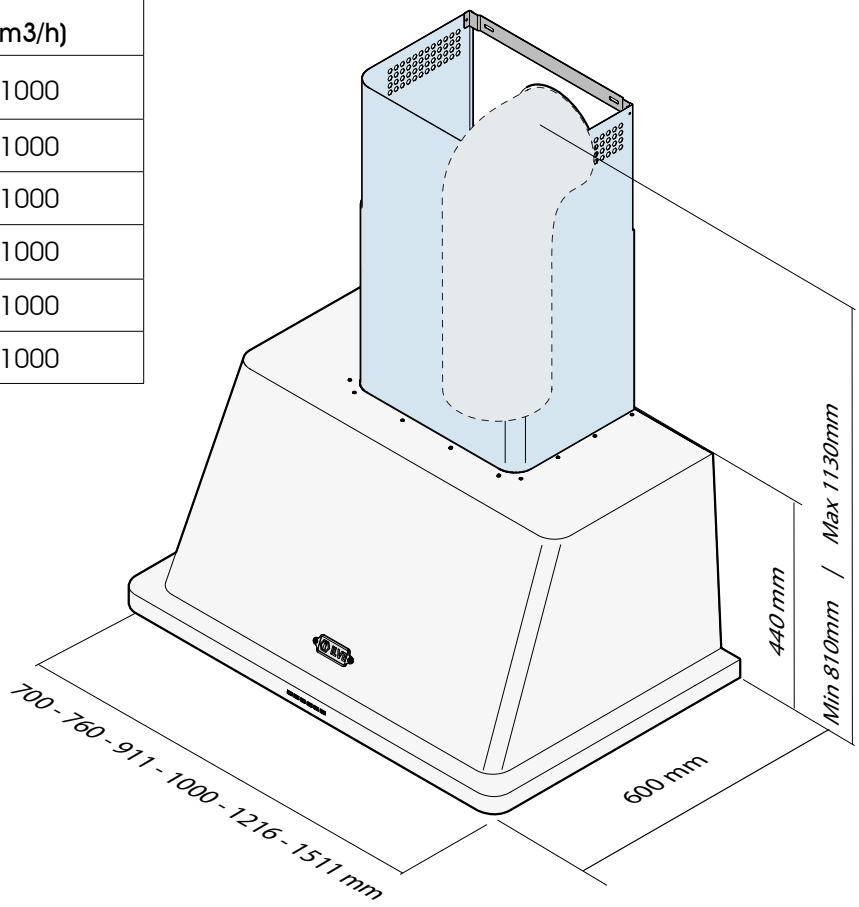

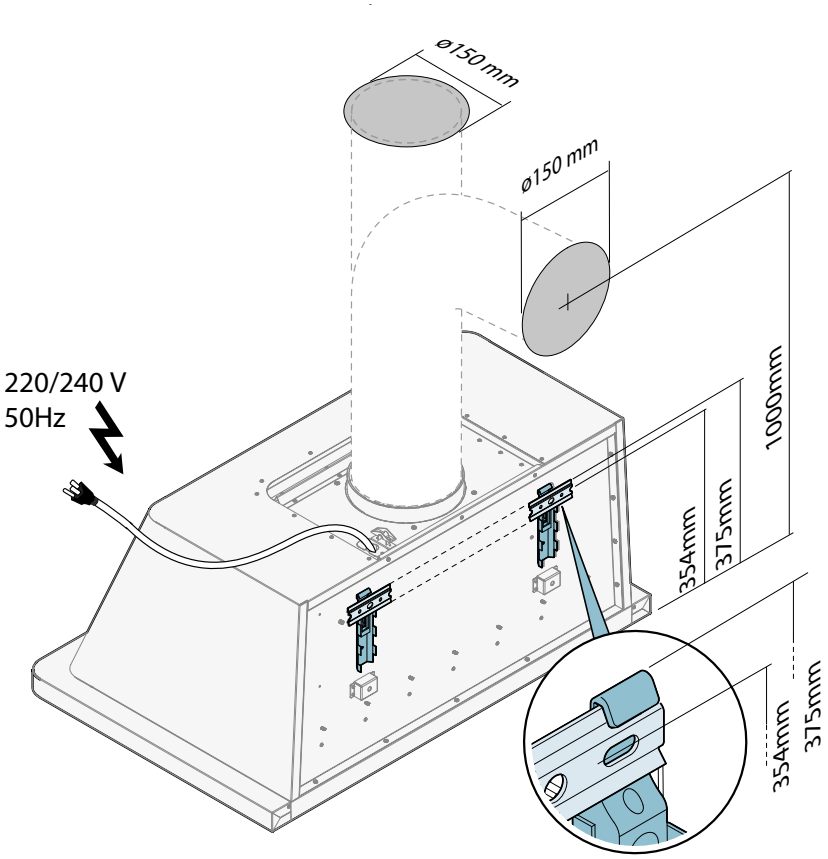

INSTALLATION

NECESSARY TOOLS

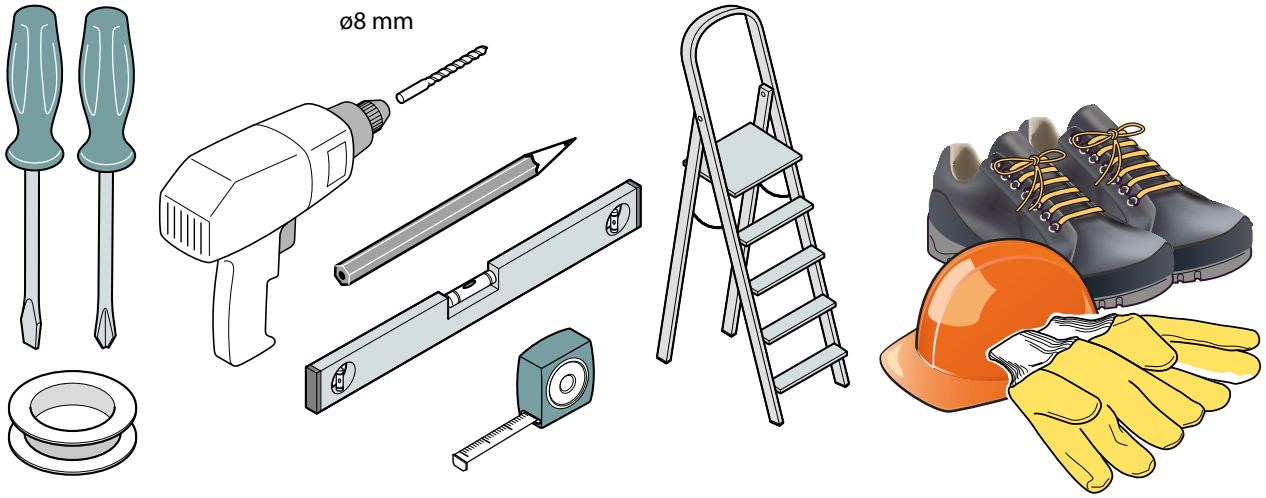

PACKAGE CONTENT

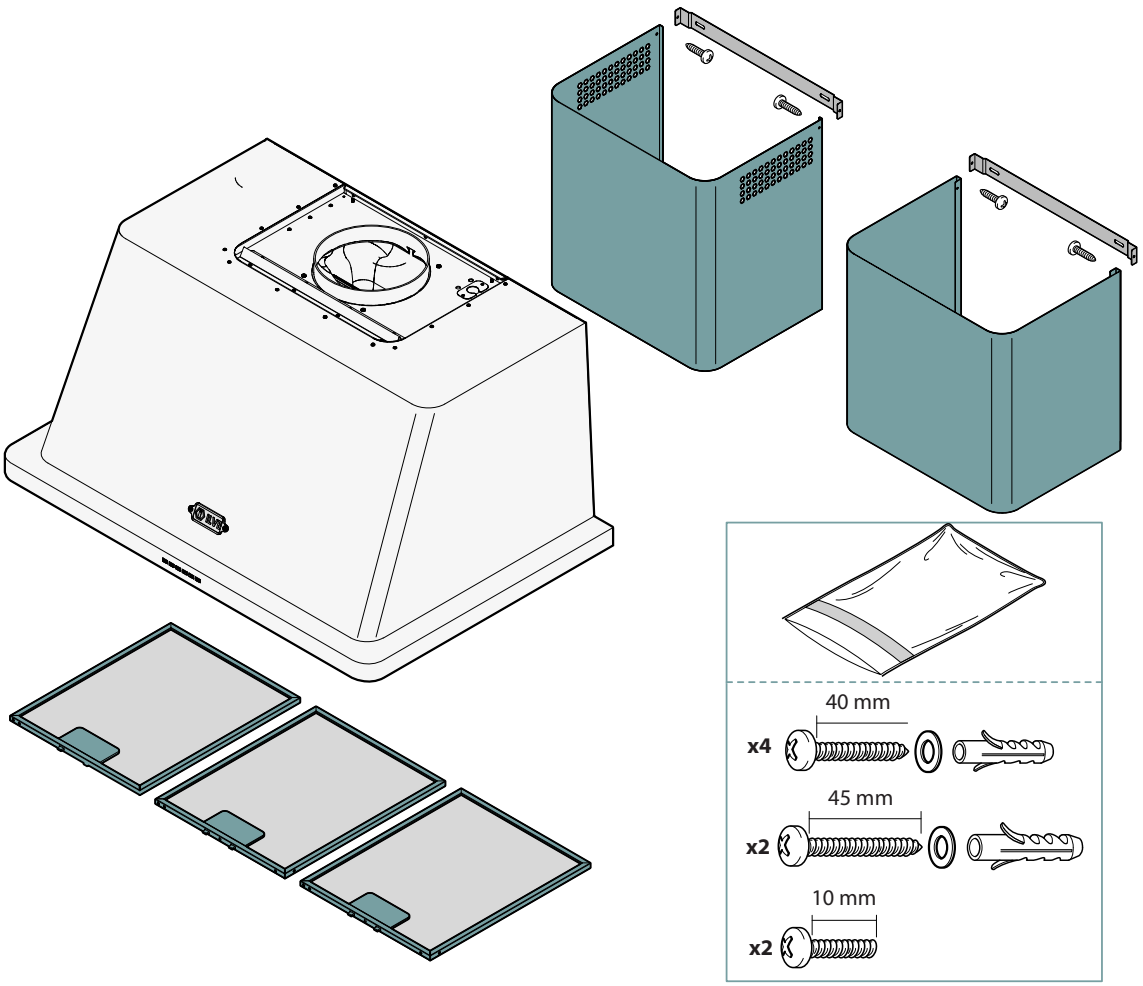

INSTALLATION

The fastening kit (screws and plugs) supplied with the hood can only be used on masonry wall. For installation on other types of walls consider alternative fastening systems, taking into a count the strength of the wall itself and the weight of the hood.

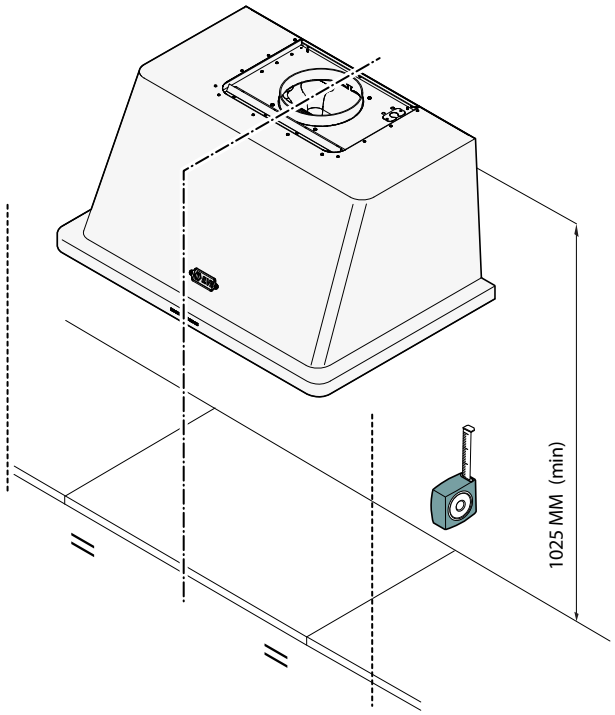

STEP 1

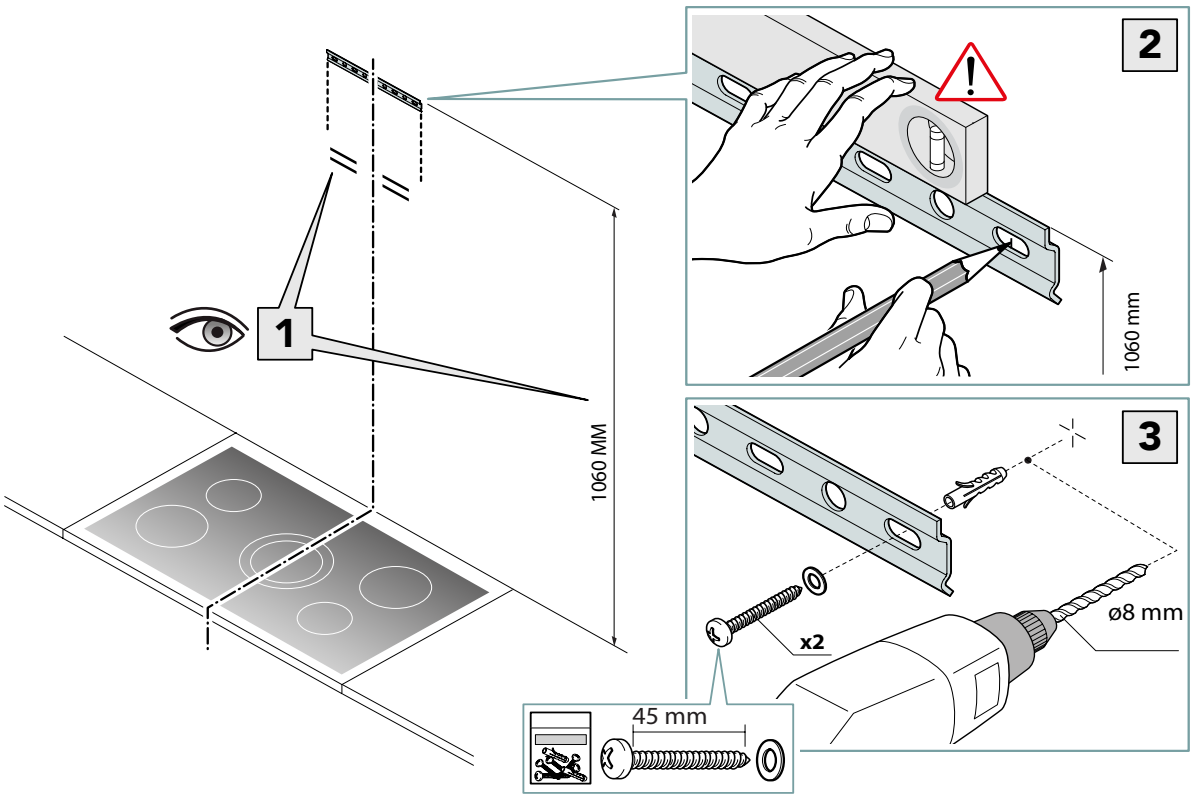

INSTALLATION

STEP 2

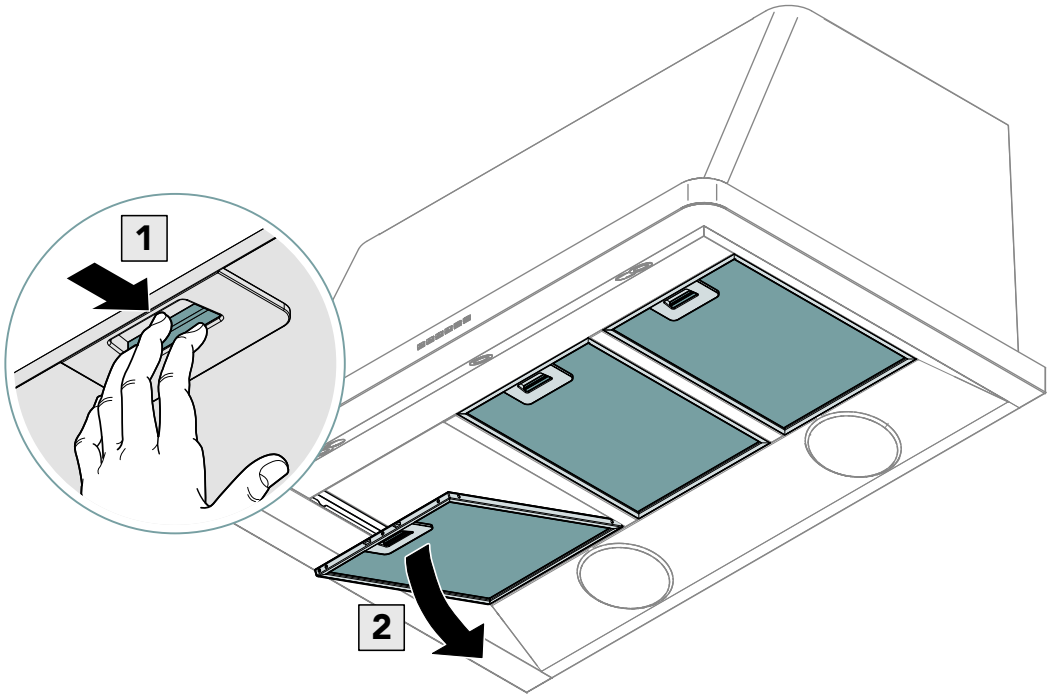

STEP 3

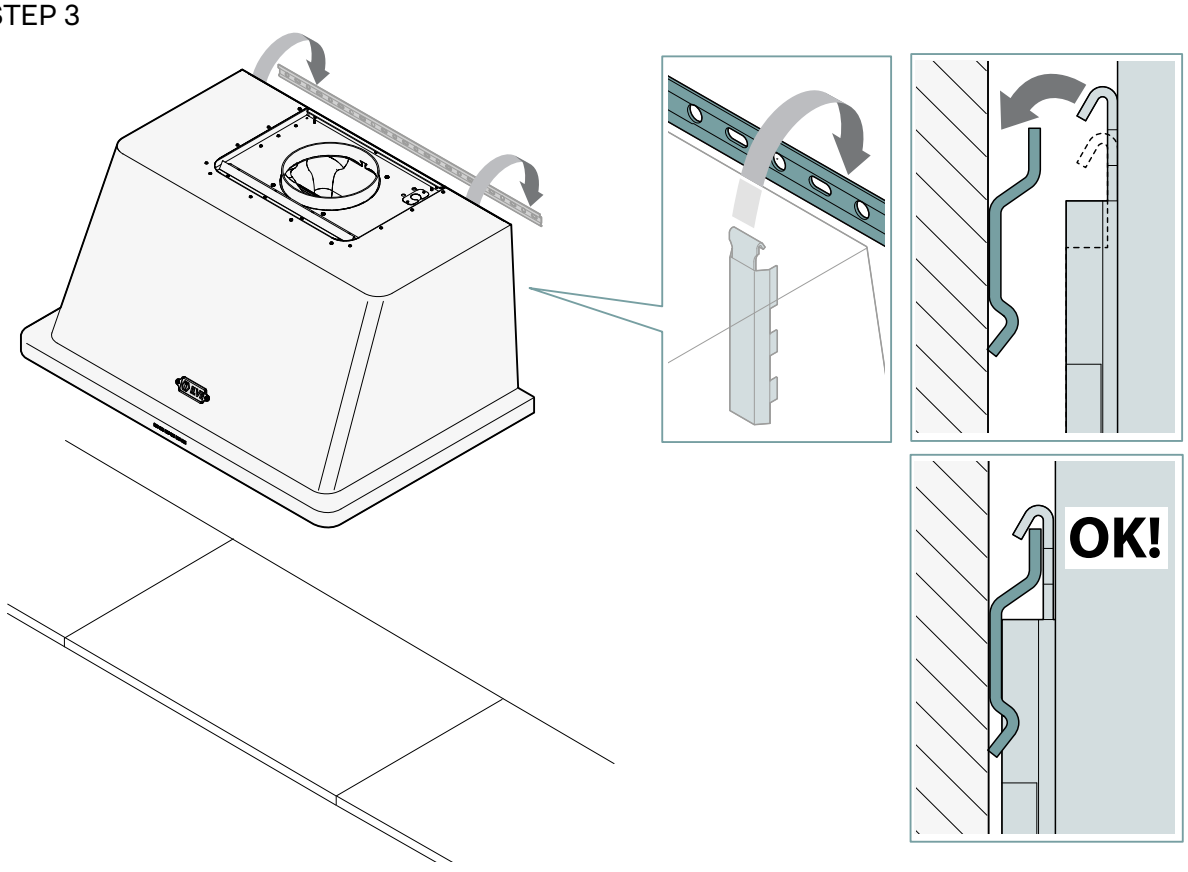

INSTALLATION

STEP 4

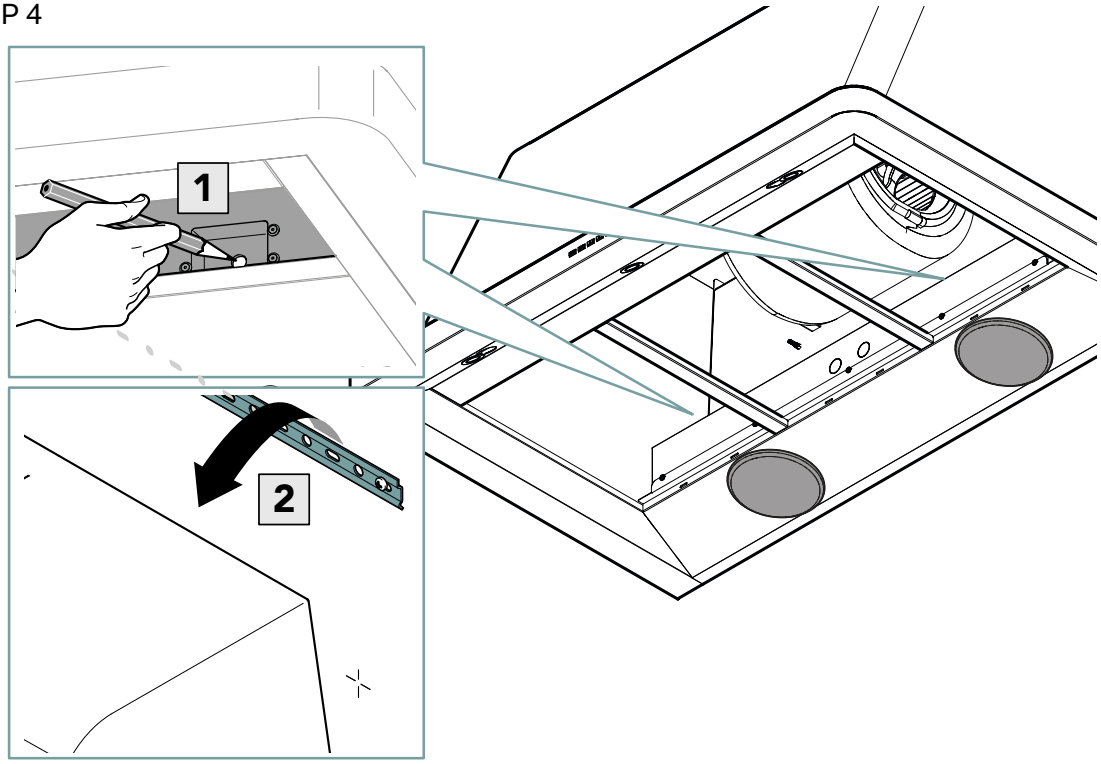

STEP 5

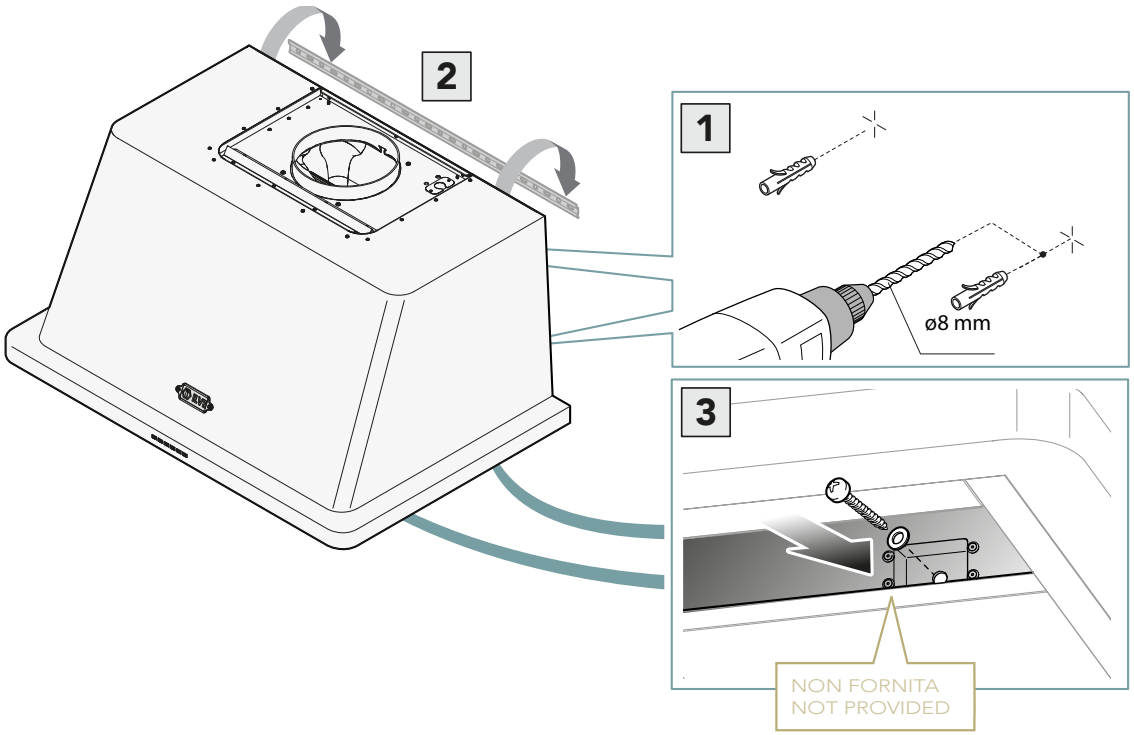

INSTALLATION

STEP 6

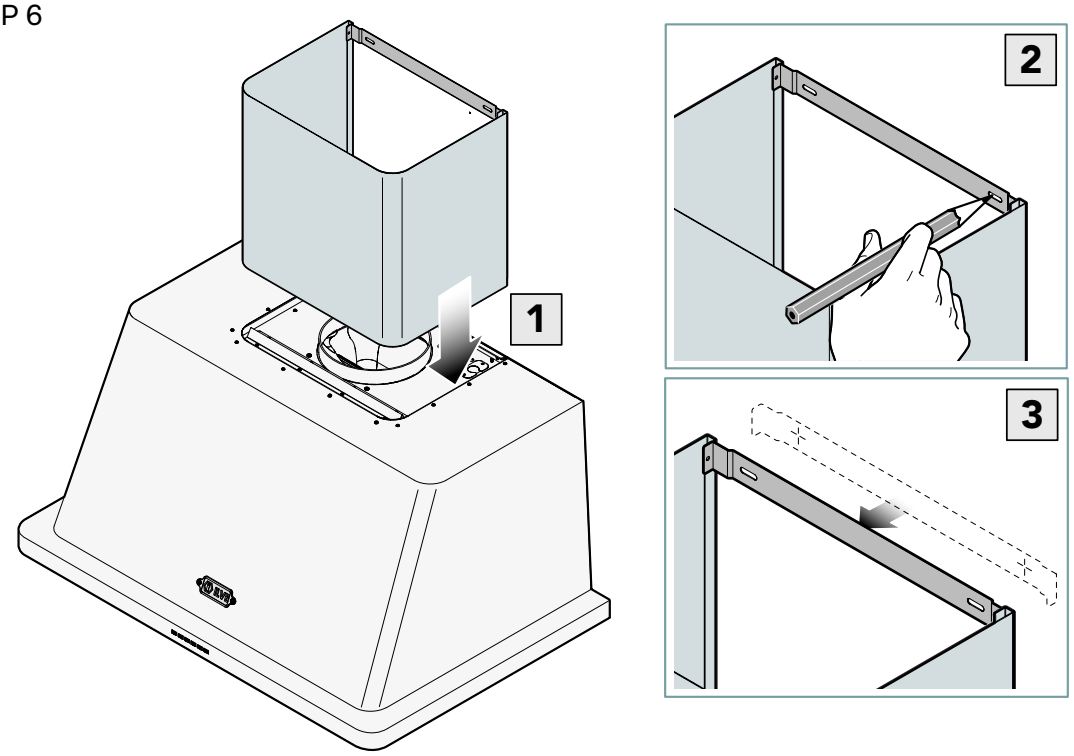

STEP 7

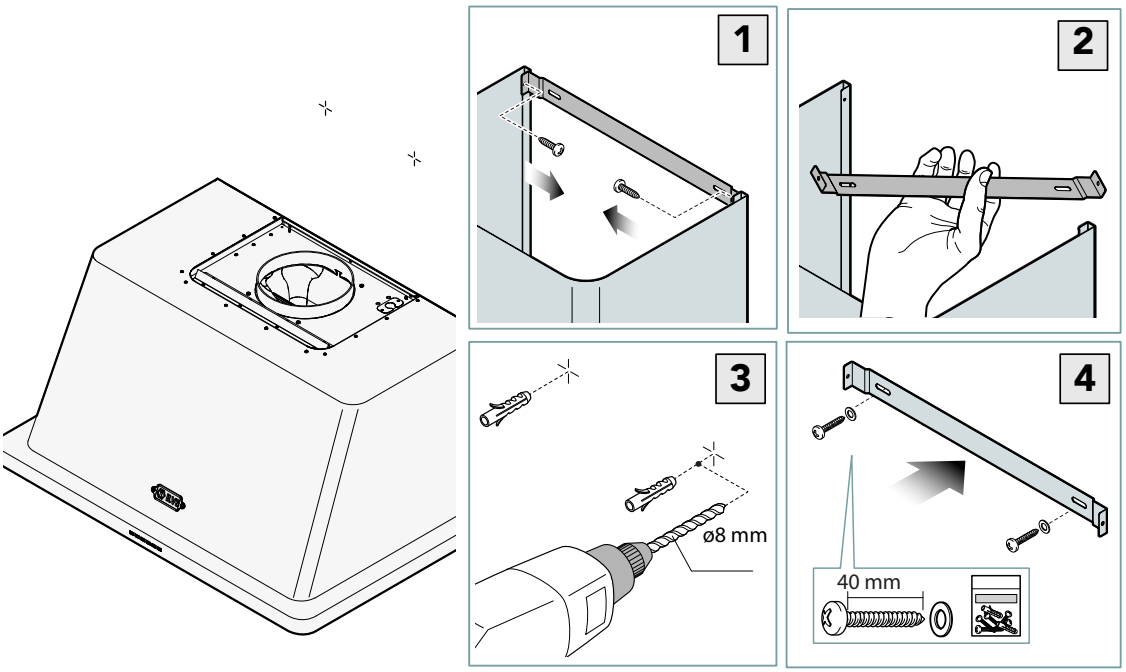

INSTALLATION

STEP 8

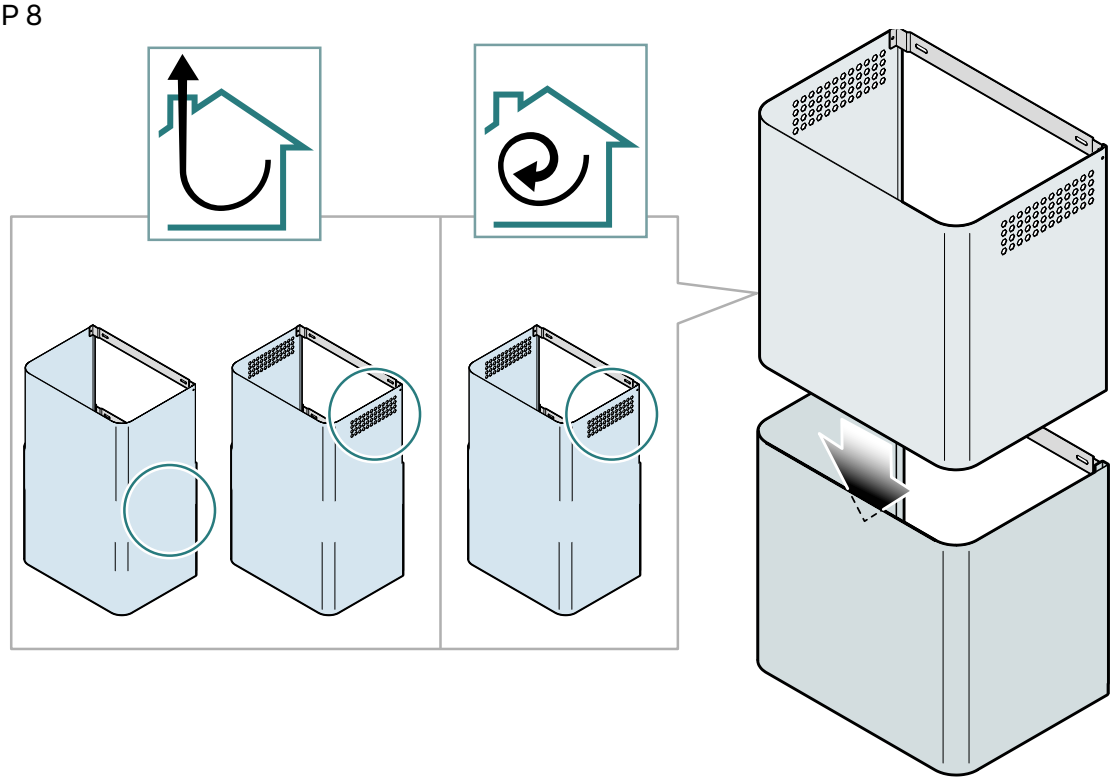

STEP 9

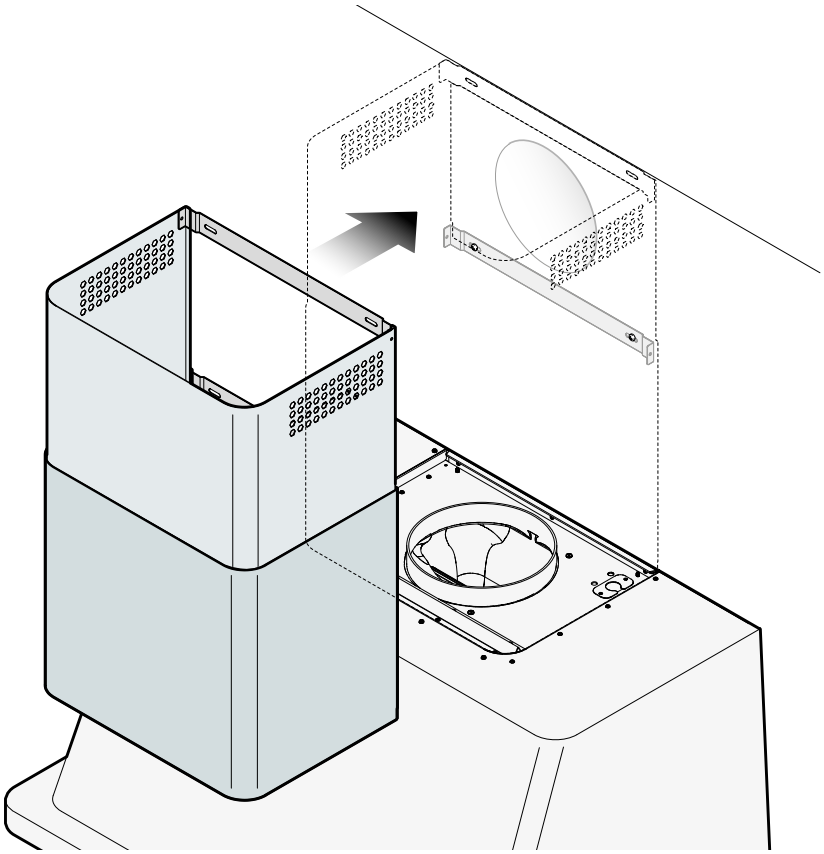

INSTALLATION

STEP 10

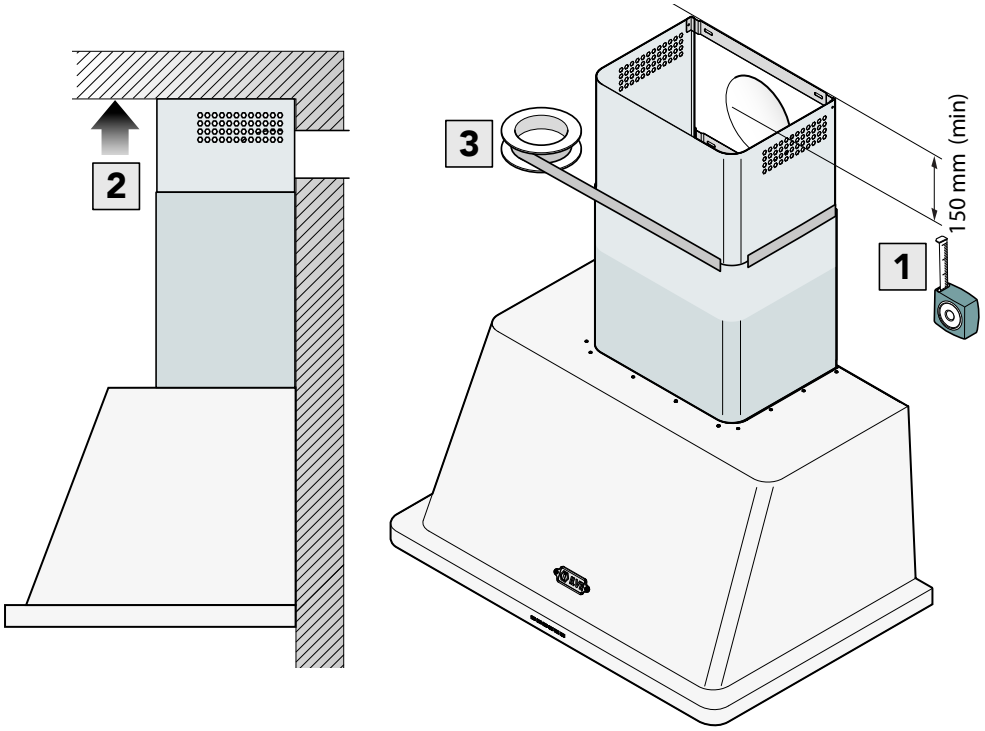

STEP 11

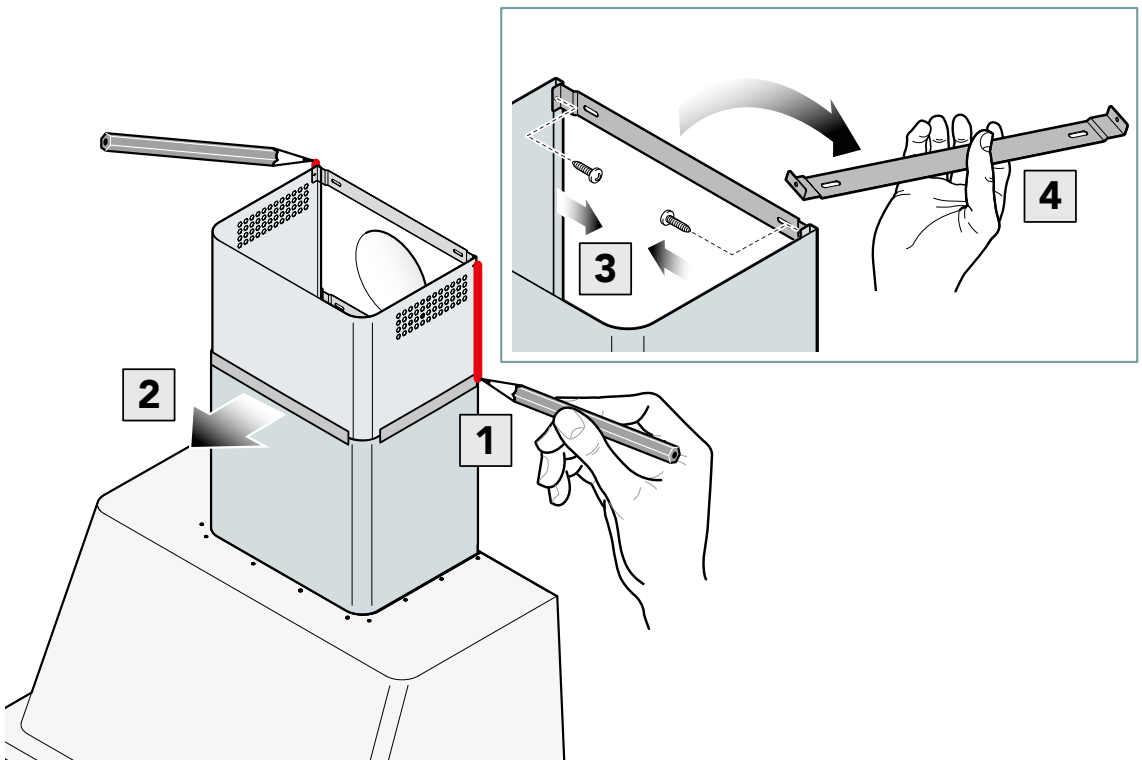

INSTALLATION

STEP 12

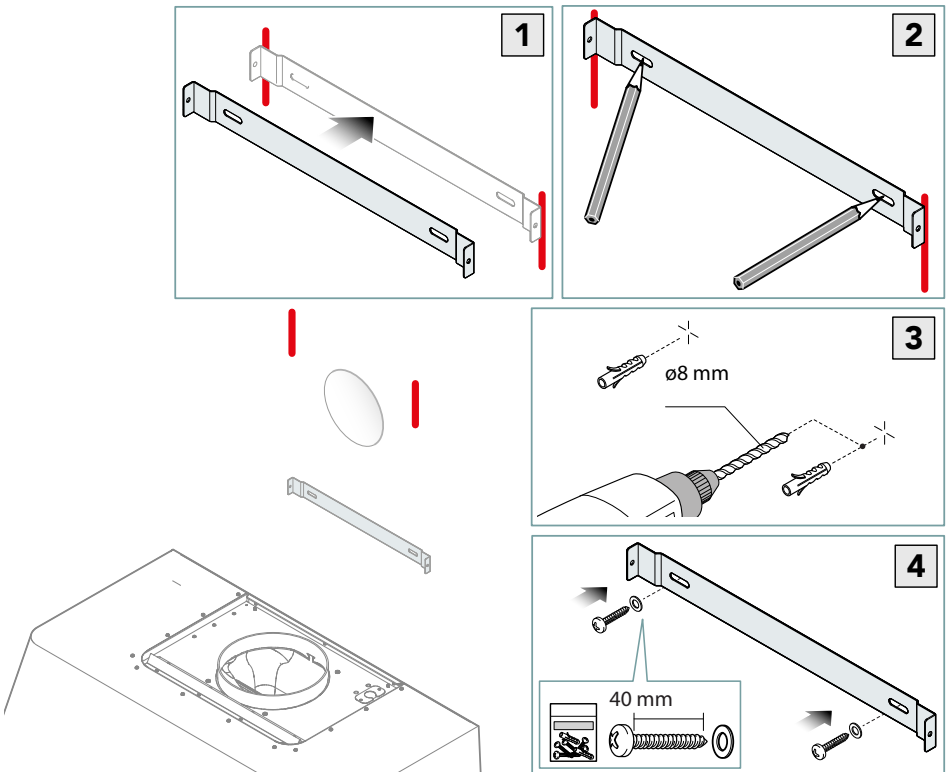

STEP 13

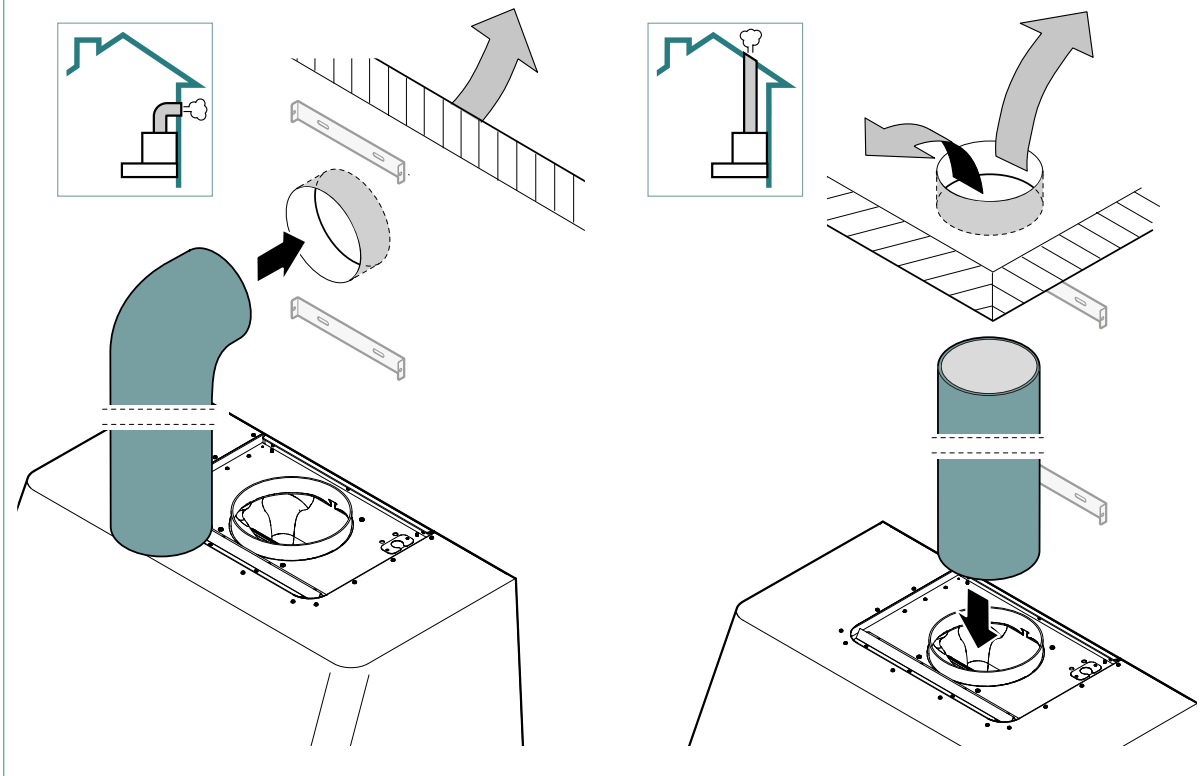

STEP 14

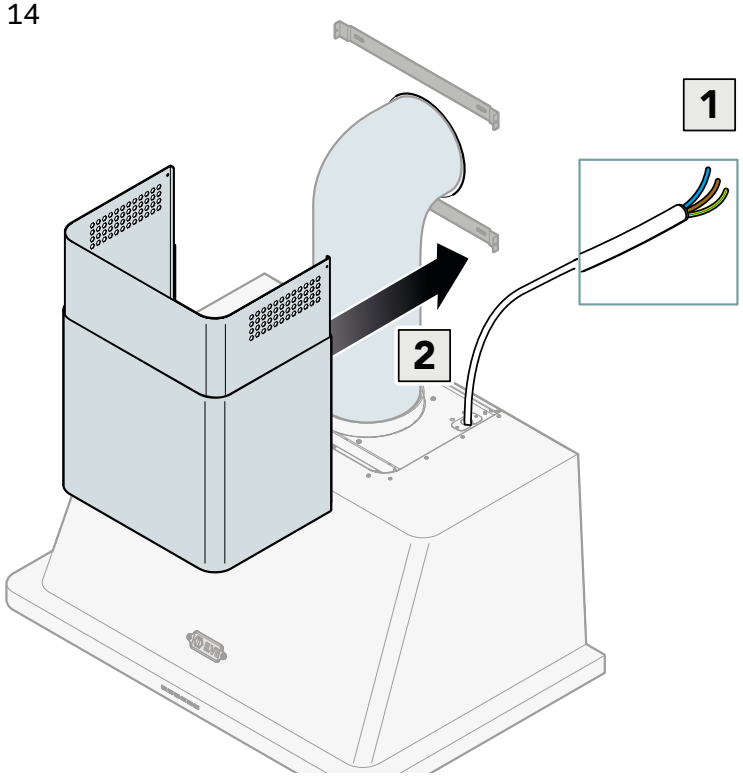

STEP 15

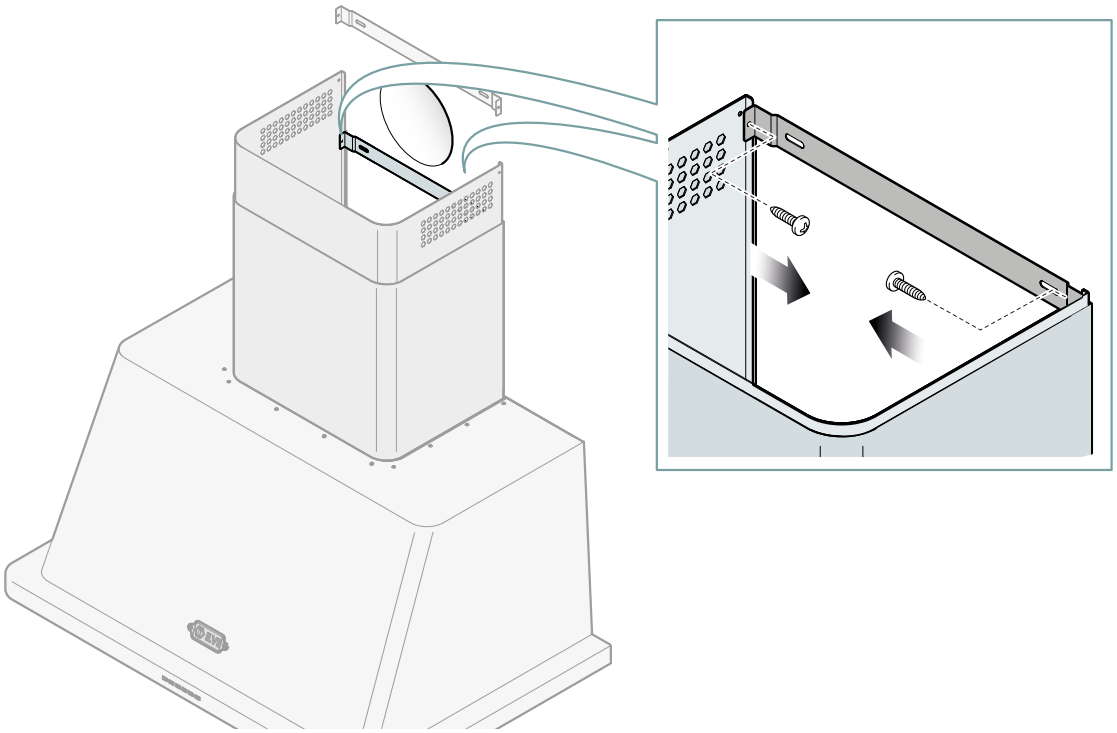

INSTALLATION

STEP 16

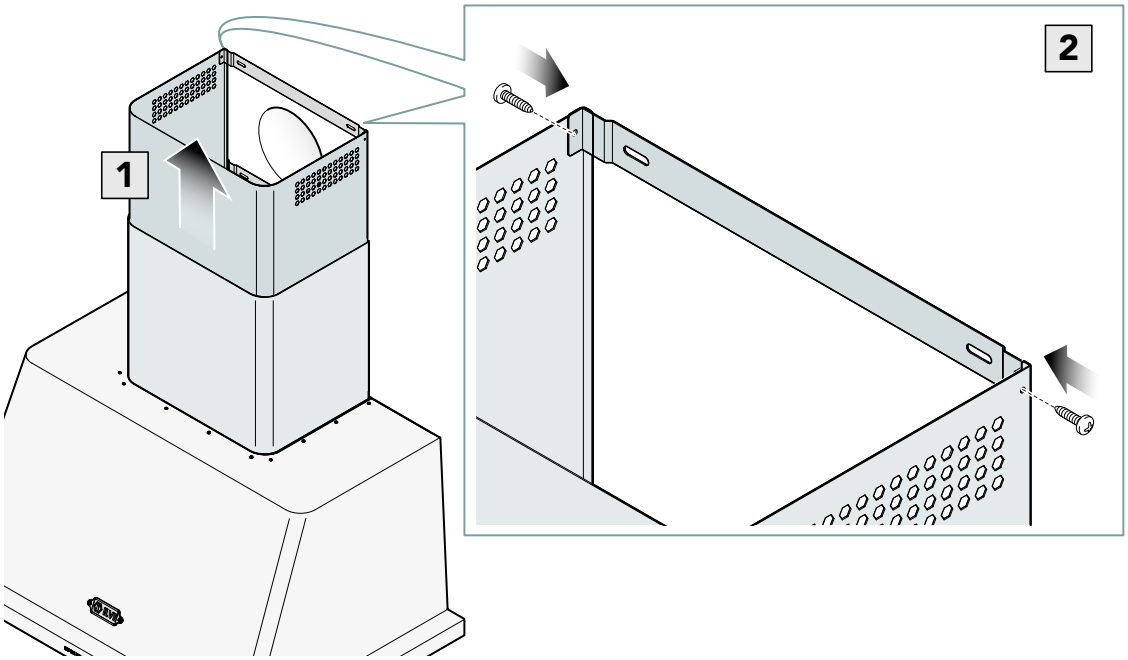

STEP 17

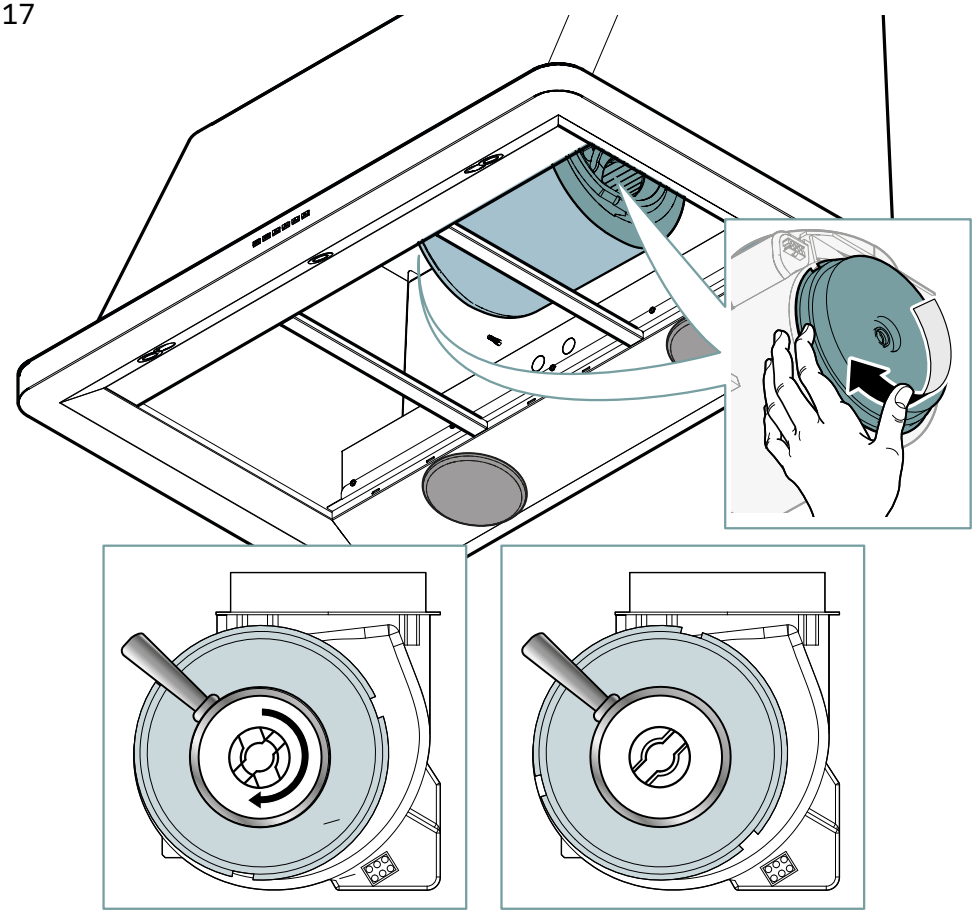

INSTALLATION

PRELIMINARY INSPECTION

After opening the package, please inspect the equipment for any possible damage that could have occurred during transport. If the product is damaged, please take note of the data printed on the product label **(Fig. 3)** and promptly notify the data to your Supplier.

TRANSPORT

The transportation, loading and unloading of the product should be performed by personnel wearing all the necessary protections **(Fig. 1).** When handling the equipment, implement all the necessary precautions to avoid damage to the same or to people and property, complying with the instructions found on the packaging.

When handling the equipment, always use clean cotton gloves to avoid fingerprints.

FIRST-USE PREPARATION

After the hood installation, please remove the protective film and carefully clean the external surface (Fig. 2.). Please note that the use of acid-based cleansers could damage the hood surface, so use a neutral or a steel-specific cleanser only.

All packaging and the protective film must be disposed of in accordance with the regulations of the country of use. Always make sure that nothing is disposed of in the environment.

Packaging materials may be potentially dangerous for children and animals.

HOW TO READ PRODUCT LABEL

The product label is located inside the hood, usually attached on its bottom, being visible after the removal of the anti-grease filters. The label shows essential data and information about the product regarding installation, customer service and warranty-related repair, as well as instructions to determine the correct spare parts for the specific model. Please do not remove, damage or alter in any way the product label, since this could impede the Manufacturer from identifying the product in case of need.

Fig. 1



Fig. 2

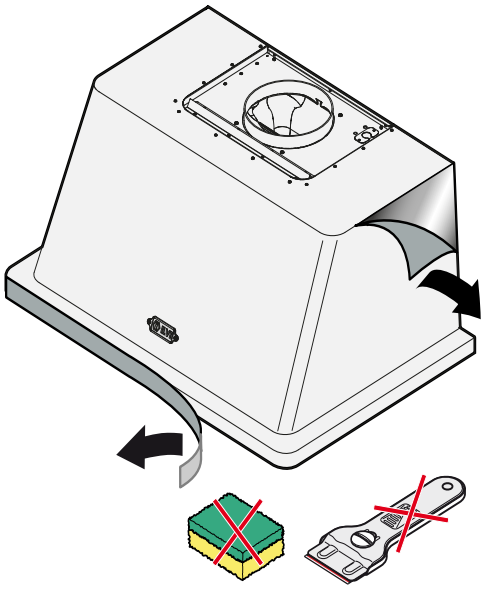

Fig. 3

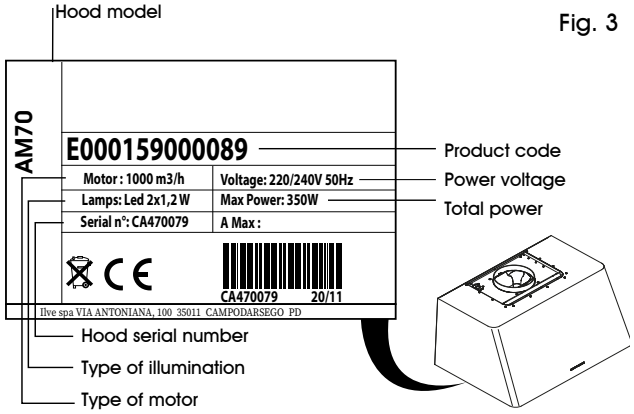

INSTALLATION

CORRECT POSITIONING

The hood should be placed at a minimum distance of 65 cm for the wall-mounted models and 75 cm for the island/roof models. It could be that Your specific hob requires the range hood to be placed at a greater distance: always refer to the manufacturer's instructions handbook for further information.
The installation site must:
- be well ventilated and not exposed to weather conditions;
- have a temperature between +16 e i +32 °C (90°F) and an humidity below 60% (any variation from the aforementioned values could accelerate the usual decay time of the carbon filters decay or limit the overall performance of the hood);
-comply with all the applicable regulation from the User's country in terms of indoor air quality, electrical system security and work safety;
- be suitable for the preparation of food.

For correct installation, refer to the drawings on page 18 to 27.

The equipment must be installed in a way that ensures easy access to electric connections. Do not use any electric wire or other electric devices to extend the original power cord. Please inspect the existing wall sockets or power cords of your kitchen and place the hood accordingly;

The fastening kit (screws and plugs) supplied with the hood can only be used on masonry wall. For installation on other types of walls consider alternative fastening systems, taking into account the strength of the wall and the weight of the hood.

Do not place the equipment near flammable materials or flammable substance containers (e.g. partition walls, gas cylinders, etc.), to avoid fire hazards.

All the installation operations, assembly, connection to the electric power supply and extraordinary maintenance must only be carried out by qualified personnel, authorised by the Distributor or Manufacturer, in accordance with the legal requirements of the country of installation and in compliance with equipment and workplace safety regulations.

The equipment must only be installed by responsible and experienced adults, without physical impairment and in perfect psychological and physical condition.

During installation, anyone and any objects not involved in the assembly operations must be kept away from the area.

Before starting the assembly operations, make sure that all the necessary tools are available and in good working order.

ELECTRIC CONNECTION

The electric connection can only be carried out by qualified personnel (electrician).

The cable and the internal hood cables must not be replaced or modified. Before connecting the equipment to the power mains:

- read the safety instructions provided at the beginning of this manual;
- make sure that the electric system installed complies with the local regulations of the country of installation;
- make sure that the electric system installed is suitable for the characteristics of the equipment being installed (see the details on the data plate).

Refer to chapter "How to read product label" on page 28 for further information on the data plate.

The equipment is supplied with the power supply cable already attached: connect a suitable plug for the load to the cable (the plug must comply with current standards).

Remember the following:
- yellow- green cable: earth;
- blue cable: neutral;
- brown cable: phase

Always install a circuit breaker for quick disconnection.The earth cable must be not interrupted by the circuit breaker.

If the power cord is faulty, it should be replaced with another one with identical features. To prevent all kinds of risks, such replacement must be carried out by the Manufacturer, its technical support service, or in any case by a similarly qualified individual. The Manufacturer is not liable for any damage resulting from the use of unauthorized or aftermarket spares. Before any interventions inside the hood, disconnect the
electric power supply.

Avoid winding the cable on itself if too long. Make sure that the cable is not in contact with liquids, sharp or hot objects (temperatures exceeding >70°C), or corrosive substances.

INSTALLATION

FUME EXHAUST CONNECTION

DUCTING/SUCTION VERSION

This type of hood is equipped with a top air outlet for discharge of fumes outside the house, which has to be connected with the inlet of the building chimney, commonly through a hose (not provided).
Horizontal tube sections must be slightly tilted upwards, to help channelling of the air to the outside. Fume discharge tubes crossing particularly cold environments (e.g. attics) should be insulated, to prevent condensation caused by temperature differences.
Suction type hoods DO NOT require carbon filters, which, on the contrary, can limit their performance.
Any changes to the tube, sudden diameter reductions, and bends, may prevent the hood from reaching optimum suction capabilities, and may jeopardise the operation of the motor, relieving the Manufacturer from all responsibility.
Make sure that the flue is in perfect working order, and that a square (concrete) or round (metal) static wind break ventilation tower with useful output section not less than double the diameter of the flue (UNI 7129) is installed at the top of the flue itself.

Comply with all air discharge regulations.

The drain chimney of the building should be dedicated to the hood only, so under no circumstances it should be shared with other devices, such as bathroom extractors, air-conditioning units, fireplaces, wood or gas stoves.

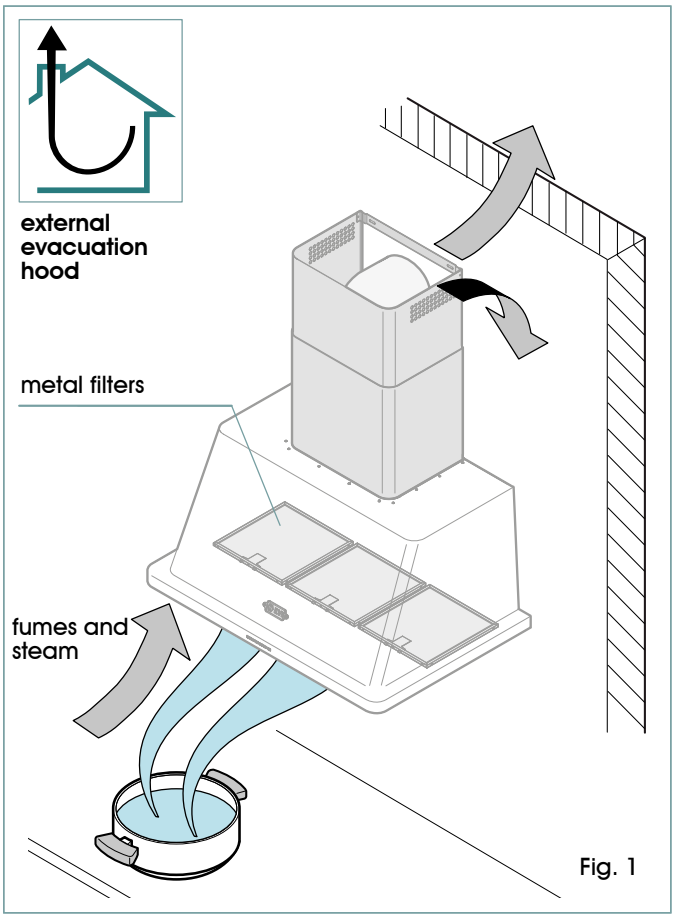

Fig. 1

FILTERING/AIR RECYCLE VERSION

In order to prevent both the flow of unclean air in the room and any damage to the fan blower, once saturated, the carbon filters should be promptly replaced. Once the carbon filters are saturated, they should be replaced as soon as possible, to prevent both the flow of unclean air and damages to the blower fan.

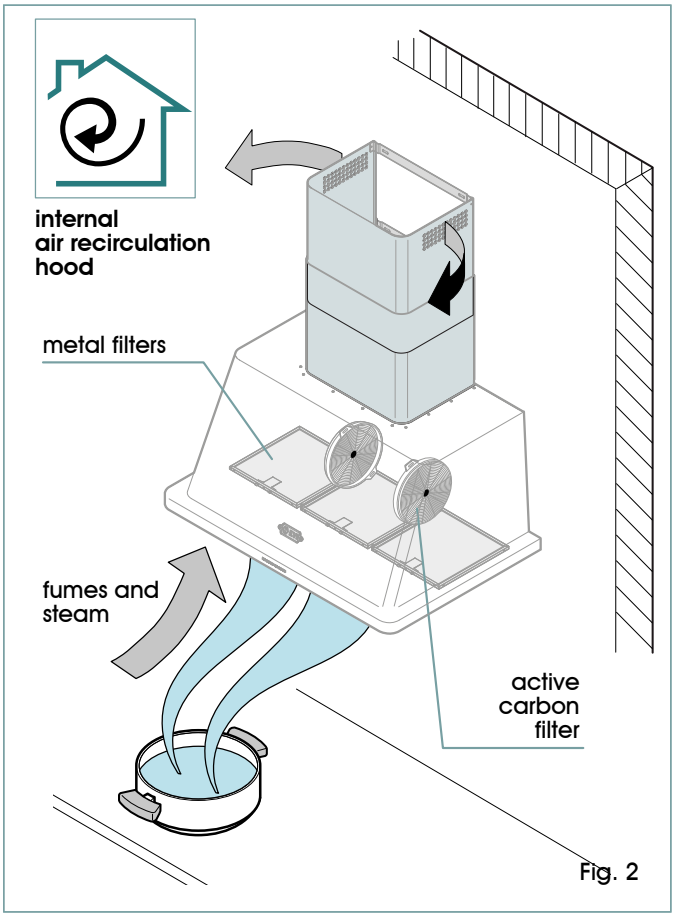

Fig. 2