EN

REFRIGERATOR

R96BICD

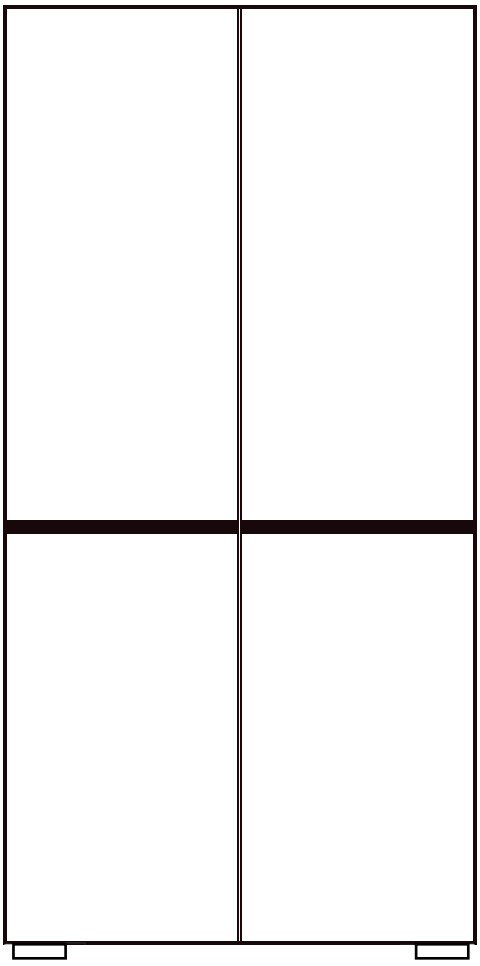

USER – Use and Maintenance

INSTALLER – Installation and Maintenance

ILVE

cod. EI33960750000EN
31/2024

INDEX

USER

04 IMPORTANT SAFETY WARNINGS

06 Basic safety symbol

07 Safety and warning information

09 INSTRUCTIONS FOR USE

09 Product features

14 Operation

18 CLEANING AND MAINTENANCE

20 TROUBLESHOOTING

INSTALLER

22 INSTALLATION

22 Preparation before Installation

25 Installation instructions of cabinet and refrigerator

IMPORTANT SAFETY WARNINGS

CAUTION

- This appliance can be used by children aged from 8 years and above and persons with reduced physical, sensory or mental capabilities or lack of experience and knowledge if they have been given supervision or instruction concerning use of the appliance in a safe way and understand the hazards involved. Children shall not play with the appliance. Cleaning and user maintenance shall not be made by children without supervision.
- Children aged from 3 to 8 years are allowed to load and unload refrigerating appliances.
- This appliance is not intended for use by persons (including children) with reduced physical, sensory or mental capabilities, or lack of experience and knowledge, unless they have been given supervision or instruction concerning use of the appliance by a person responsible for their safety.
- Children should be supervised to ensure that they do not play with the appliance. The refrigerant isobutene(R600a) is contained within the refrigerant circuit of the appliance,a natural gas with a high level of environmental compatibility,with which is nevertheless flammable. During transportation and installation of the appliance, ensure that none of the components of the refrigerant circuit becomes damaged. The refrigerant (R600a) is flammable.

WARNING



Symbol ISO 7010 W021 Warning; Risk of fire/flammable materials!

1. WARNING: The appliance must be positioned so that the plug is accessible.
2. WARNING: If the power cord is damaged, it must be replaced by the manufacturer,its service agent or similarly qualified person to avoid any hazards.
3. WARNING: Keep ventilation openings, in the appliance enclosure or in the built-in structure, clear of obstruction.
4. WARNING: Do not use mechanical devices or othermeans to accelerate the defrosting process, other than those recommended by the manufacturer.
5. WARNING: Do not damage the refrigerant circuit.
6. WARNING: Do not use electrical appliances inside the food storage compartments of the appliance, unless they are of the type recommended by the manufacturer.
7. WARNING: This unit uses R600a as the refrigerant and cyclopentane as the foaming agent,both of these materials are easily burnt, when discarding the unit it should be kept away from sources of extreme heat.
8. WARNING: Danger of electrical shock,the unit is used yellow-green grounding wire of this appliance must be grounded before operation.
9. WARNING: When the refrigerator is discarded after use please follow all local laws and regulations.
10. WARNING: The refrigerant and insulation blowing gas are flammable. Disposing of the refrigerant can only be done at authorized waste disposal centers. Do not expose the refrigerant or insulation to extreme heat or an open flame.
11. WARNING: Do not store explosive substances such as aerosol cans with a flammable propellant in this appliance.
12. WARNING: When positioning the appliance, ensure the supply cord is not trapped or damaged.

IMPORTANT SAFETY WARNINGS

13. WARNING: Do not locate multiple portable socket- outlets or portable power supplies at the rear of the appliance.
14. WARNING: To avoid contamination of food, please respect the following instructions:

    - Opening the door for long periods can cause asignificant increase of the temperature in the compartments of the appliance.

    - Clean regularly surfaces that can come in contact with food and accessible drainage systems.

    - Clean water tanks if they have not been used for 48h; flush the water system connected to a water supply if water has not been drawn for 5 days.

    - Store raw meat and fish in suitable containers in the refrigerator, so that it is not in contact with or drip onto other food.

    - Two-star frozen-food compartments are suitable for storing pre-frozen food, storing or making ice-cream and making ice cubes.

    - One-, two- and three-star compartments are not suitable for the freezing of fresh food.

    - If the refrigerating appliance is left empty for long periods, switch off, defrost, clean, dry, and leavethe door open to prevent mould developing within the appliance.
15. WARNING: Risk of child entrapment. Before you throw away your old refrigerator or freezer:

    - Take off the doors.

    - Leave the shelves in place so that children may not easily climb inside.
16. WARNING: Before performing any type of installation or cleaning,disconnect the refrigerator from the power source and reset the temperature controls to the desired setting(s).

    When you are finished, reconnect the refrigerator to the electrical source and reset the temperature controls to the desired setting.
17. WARNING:This appliance is intended to be used in household and similar applications such as

    - staff kitchen areas in shops,offices and other working environments;

    - farm houses and by clients in hotels,motels and other residential type environments;

    - bed and breakfast type environments;

    - catering and similar non-retail applications.

IMPORTANT SAFETY WARNINGS

Basic safety symbol

This guide contains many important safety messages. Always read and obey all safety messages.



This is the safety alert symbol.It alerts you to warnings that will inform you of any potential hazards that could hurt or kill you. These messages will also help protect your unit from damage. All safety messages will be preceded by the safety alert symbol and the hazard signal word DANGER,WARNING,or CAUTION.

These words mean:



DANGER You could be killed or seriously injured if you don't follow the instructions.



WARNING You may be killed or seriously injured if you don't follow the instructions.



CAUTION Indicates an imminently hazardous situation which if not avoided, may result in minor or moderate injury or product damage only.

Appliance connection

This product is applicable to 220-240V/50Hz only,and the allowable voltage fluctuation rangeis 187V~242V.It can not be used if the voltage frequency is not 50Hz.
In order to ensure safety,the socket and its cable must be able to withstand the current of above 10A.



CAUTION

LED light

Replaceable (LED only) light source by a professional.

This product contains two light sources of energy efficiency class F.

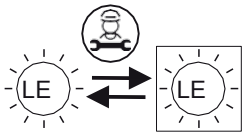

Precautions

To reduce the risk of fire,electric shock,or injury to persons when using your product,basic safety precautions should be followed,including the following.

Read all instructions before using this appliance.

IMPORTANT SAFETY WARNINGS

Safety and warning information

- If you believe there is refrigerant leaking, do not touch the unit or the power outlet, ventilate the room and if possible turn your unit off using the circuit breaker. Call the manufacturer immediately.
- Refrigerant will cause serious injury when coming into contact with the skin or eyes. If this happens please immediately seek out medical treatment.
- Make sure to use a grounded power outlet.Consult a qualified electrician or service person if the ground-ing instructions are not completely understood,or if you have doubts on whether the appliance is properly grounded.
- Wait for 5 minutes or longer before reconnecting the power cord. Failure to do so may cause the freezer to fail.
- The incorrect grounding may cause breakdown and/or electric shock.
- A dedicated outlet should be used.Using several devices at one outlet may cause fire.
- Do not allow the power plug to face upward or to be squeezed at the back of the fridge. Water may be flown into or the plug may be damaged, which can cause fire or injury.
- Do not allow the power cord bent or pressed by the heavy object to be damaged.
- Unplug the power cord when cleaning,handling the interior lamp of the fridge. Failure to do so may result in a electric shock or other injury.
- Remove water or dust from the power plug with a dry clean cloth,do not use wet hands touch it and insert it with the ends of the pins securely connected.
- Do not use the fridge for non-domestic perposes(storing medicine or testing material,blood,using on a ship,etc.) It may cause an unexpected risk such as fire,electric shock,deterioration of stored material or chemical reaction.
- Do not use or store inflammable materials ether,benzene,alcohol,medicine,liquid propane gas,spray or cosmetics near or in the fridge.It may cause explosion or cause a fire.
- Do not put any glassware that is not design for use in a fridge or freezer inside. The glass may crack or break which can lead to injury.
- Do not place the heavy object or the dangerous objects such as:cup,flower vase,cosmetics,medicine or any containers with water in the fridge. It may be dropped and cause injury,fire or electric shock when opening or closing the door.
- Do not touch food or containers in the freezer with wet hands.It may cause frostbite.
- Do not spray water at the outside or the inside of the fridger do not clean it with benzene or thinner.
- Do not clean the unit with any acidic cleaners, abrasive brushes, sharp tools, and/or any cleaner that contains benzene.
- Do not use a drier to dry the inside of the unit,nor light a candle to remove odour.It may cause an explosion or fire.
- Do not cling to the door or the trays of the door.It may make the fridge fall down and cause serious injuries or even death. Especially,do not allow the children to do the above.
- Do not put ice in a thin crystal cup or ceramic ware.It may break cup or ceramic ware to cause injury.
- Do not allow anyone except a qualified service person to disassemble, repair, or alter the fridge. Unless directed by the manufacturer.It may cause injury,electric shock or fire.
- QueThis appliance is intended to be used in household and similar applications such as

  - staff kitchen areas in shops, offices and other working environments;

  - farm houses and by clients in hotels, motels and other residential type environments;

  - bed and breakfast type environments;

IMPORTANT SAFETY WARNINGS

- catering and similar non- retail applications.

- Do not install the fridge in a wet or high humidity environment.Failure to do so will cause premature deterioration, cause the unit to run more frequently and can cause an electrical shock.
- Install the appliance in a dry,well-ventilated room.
- The appliance should be placed close to the wall outlet,it is easy to cut off the power supply at the time of the accident.
- Do not expose the unit to extreme heat or any open flame.
- Keep your unit in a well ventilated area, make sure if the unit is built-in that there is adequate air flow around the unit.
- Do not cover or obstruct the exhaust area on the back of your unit, failure to do so may cause eclectically shock or injury. It may cause electric shock or injury.

INSTRUCTIONS FOR USE

Product features

	This unit container super freeze, energy-savings, noise reduction, optimal refrigeration are preset options for your unit.
Precise temperature control	Microcomputer control systems are able to separately control both the fridge and freezer more accurately.
Automatic defrosting	This unit is equipped with a program that controls the frequency and duration of defrosting your freezer. This will make sure that you never need to manually defrost the freezer.
LED display and temperature controls	The control board respectively displays the fridge and freezer temperatures. To change the setting in either section simply press the up or down arrow depending on the chance you would like made.
Tempered glass,safe and reliable	Tempered glass, is safe and reliable, easy to clean and durable.
Easy clean and removable door seal	The door seal(s) are easy to remove and clean, allowing the product to operate efficiently for longer.
Door-open alarm system	If you leave any of your doors open for longer than 1-minute the alarm system will remind you to close the door.

INSTRUCTIONS FOR USE
Product features

Components

The layout of items below are subject to change without notice, and may not look or come setup as seen in the picture below.

- The appearance and specifications of the actual product may differ depending on the model. You will achieve the most efficient use of energy for your appliance if you combine the drawers, glass shelves and door shelves as shown in the Product components page.

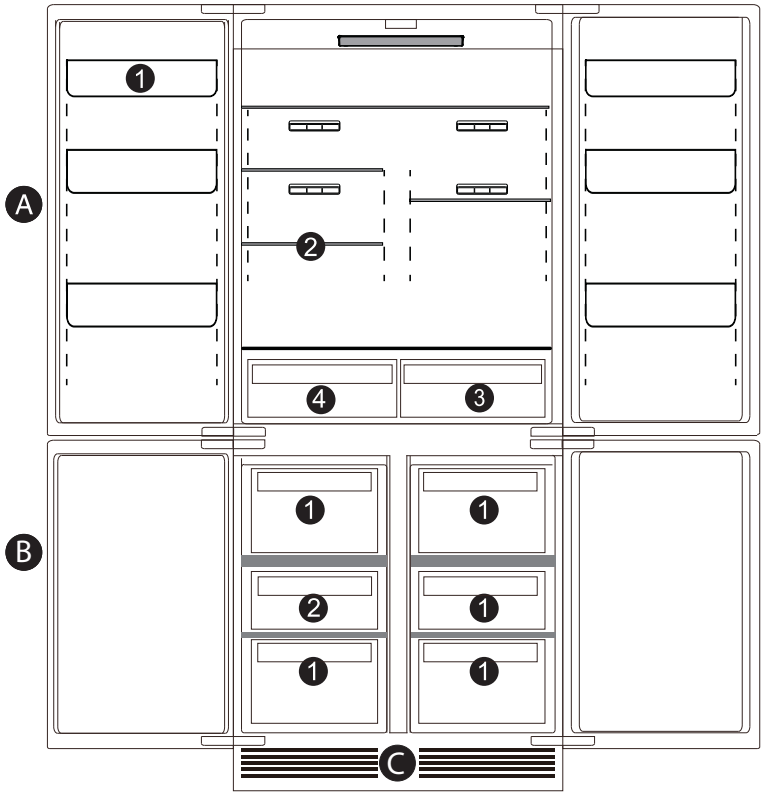

A **Refrigerator compartment**

1 - Refrigerator door rack
2 - Refrigerator glass shelves
3 - Flexible temperature zone
4 - Moist zone

B **Freezer compartment**

1 - Freezer drawer
2 - Extreme freezer drawer

C **One-key start**



Press one-key switch at bottom of the Product to power on it.

INSTRUCTIONS FOR USE
Product features

Refrigerator compartment

The fridge compartment should mainly be used to store food that will be consumed in a short time.

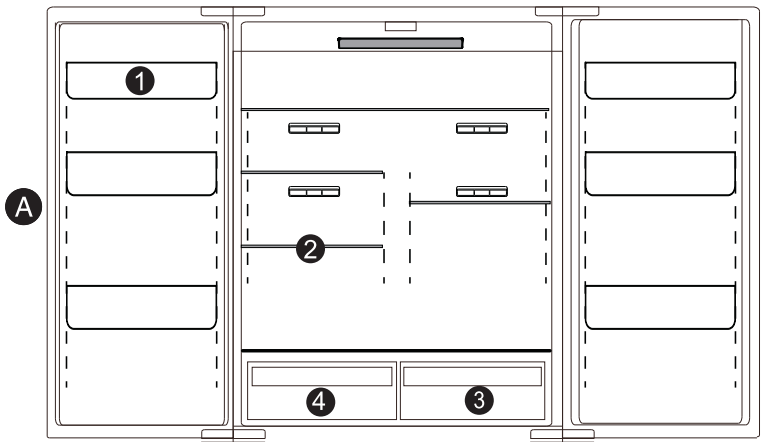

Freezing compartment

The freezing chamber is used to freeze foods,store deeply frozen foods and make ice cubes.
It can preserve foods for a long time.

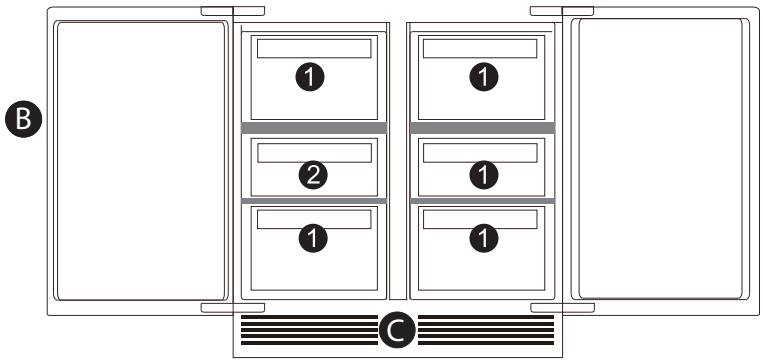

⚠ CAUTION

The food especially the oily food which stored in refrigerator ,please avoid the direct contact with the liner.When the interior stained with oil or oily food soup stains, should be cleaned immediately to avoid the long contact with the liner which may lead to the liner corrosion and cracking.
- Two-star(**)frozen-food compartments are suitable for storing pre-frozen food, storing or making ice-cream and making ice cubes.
One star(*), two star(**)and three star(***)compartments are not suitable for the freezing of fresh food.
- If the refrigerating appliance is left empty for long periods,switch off, defrost, clean, dry, and leave the door open to prevent mould developing within the appliance.
- Please depend on the actual situation of the product.

INSTRUCTIONS FOR USE
Product features

Basic dimensions (refrigerator + cabinet)

Cabinet hole size (mm)	
Width	964
Depth	≥ 580
Height	2000
Refrigerator dimensions (L*P*H)	962*572*1996

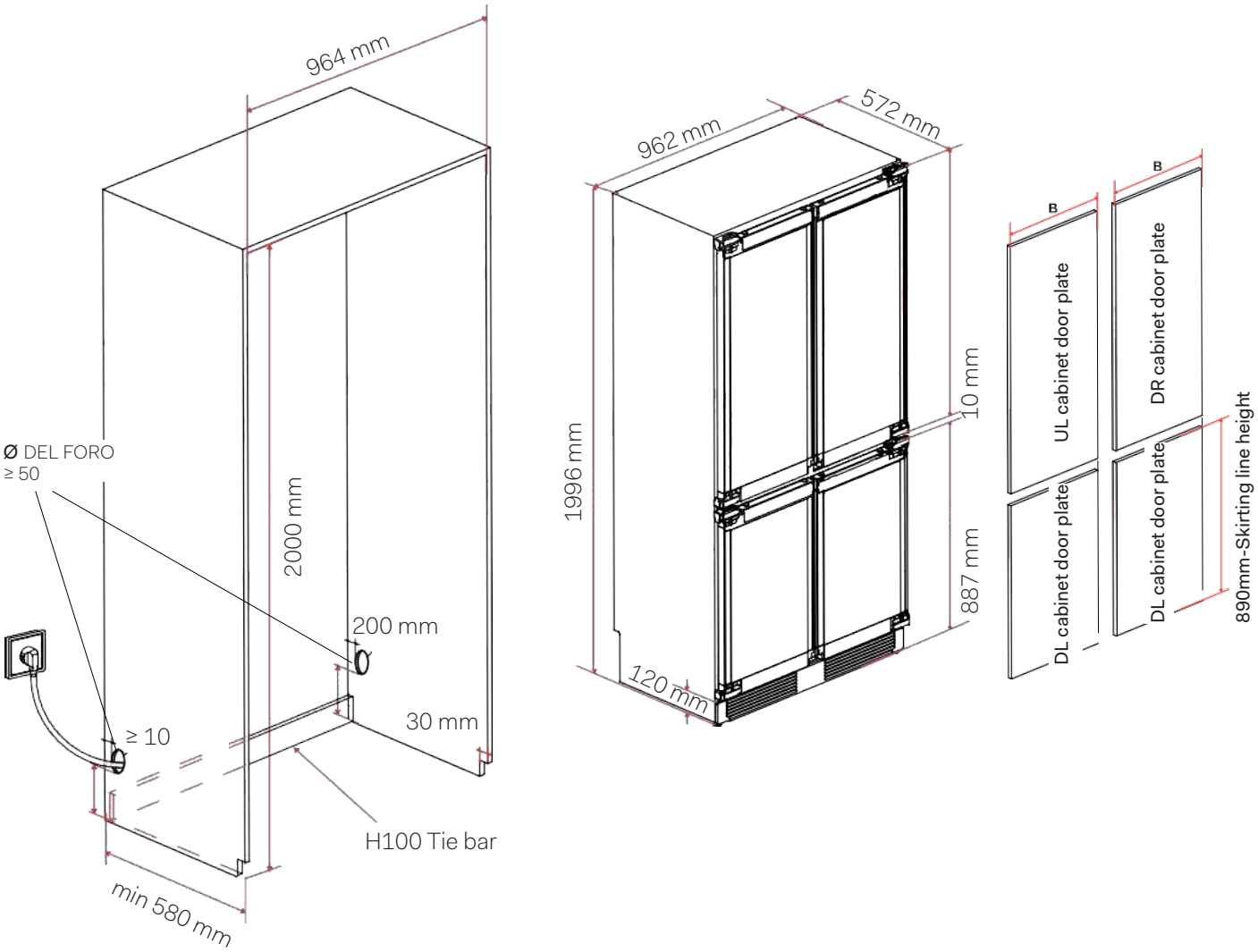

Ventilation of appliance, clearance showed below shall be instructed.

Clearances mm				
Top	Left side	Right side	Rear	Bottom
4	4	4	8	0

*** The appearance and specifications of the actual product may differ depending on the model.**

INSTRUCTIONS FOR USE

Product features

Refrigerator door plate thickness A (mm)	Soacing X (mm)	Ref: door plate thickness B (mm)	
		Full lap 1	Full lap 2
16 - 20	4	496	494
21 - 22	6	494	492

For example, the design clearance should be 4 mmwhen the thickness of external door plate is 20 mm. The width of cabinet door plate is 496 mm in full lap mode 1, or 494 mm in full lap mode 2.

Full lap 1

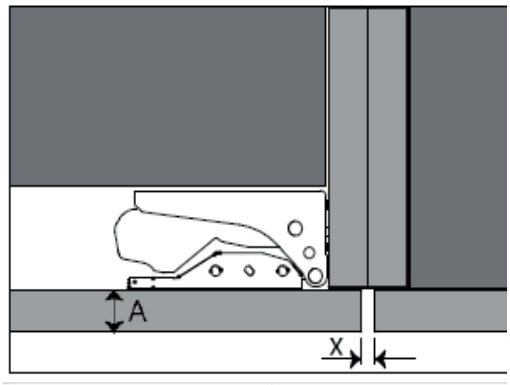

Full lap 2

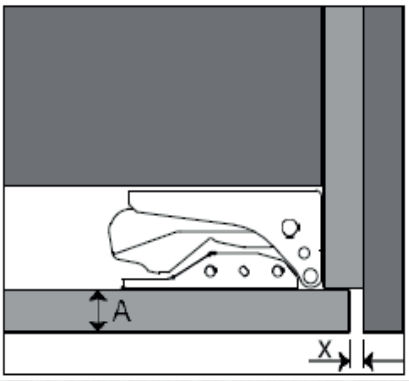

A = Tickness of refrigerator cabinet door plate
B = Tickness of refrigerator cabinet door plate
X = Clearance

Cabinet requirements:

The left and right cabinet door has the same dimensions, with width of B; the height is determined by the cabinet;
(2) The door plate and cabinet are provided with full lapping;
(3) The skirt line height is within 80-120mm; otherwise, it may affect the Product's cooling;
(4) The hole for power cable and water pipe can be drilled at single side or both sides based on the actual conditions;
(5) The power socket should be located in the adjacent cabinet;

INSTRUCTIONS FOR USE
Operation

Control panel

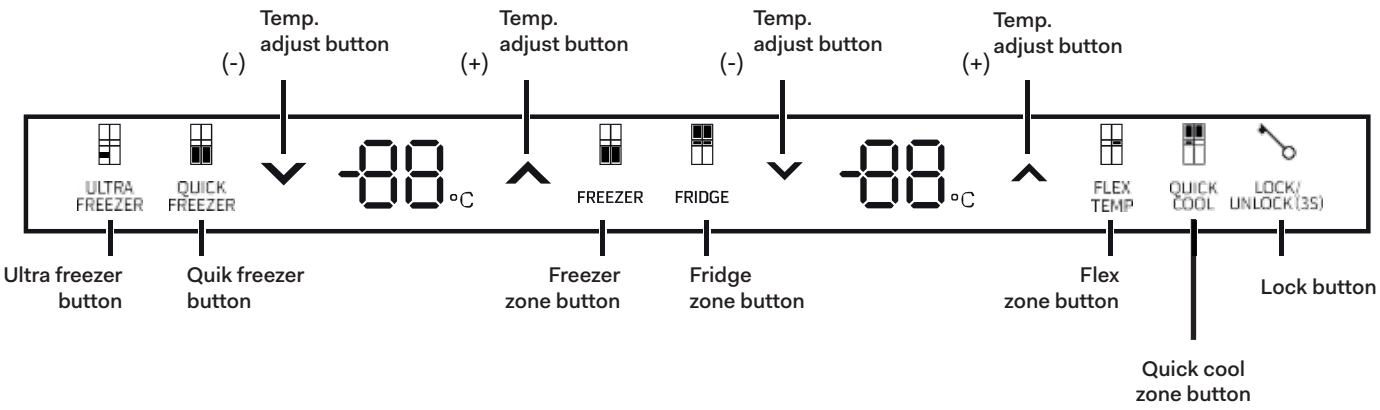

Feature selection & temperature settings

- Fridge zone temperature setting range: 2°C -8°C;
- Freezer zone temperature setting range: -15°C--23°C;
- FLEX zone temperature setting range: -4°C ,0°C and 4°C ;
- Default set temperature for initial power-on: Fridge zone -5°C, freezer zone -18°C and FLEX zone - 0°C;
- ULTRA FREEZER button: The ULTRA FREEZER mode will be enabled by touching this button, and the icon above this button will be On;
- Under the ULTRA FREEZER mode, the set temperature shown on the display does not change, however the temperature of the freezer zone will decrease continuously;
- The ULTRA FREEZER mode can be exited after a continuously running for 2hrs or when the temperature of the freezer zone sensor is below -35°C or when the button is touched again, and the icon above this button will be Off.
- QUICK FREEZER button: The QUICK FREEZER mode will be enabled by touching this button, and the icon above this button will be On;
- Under the QUICK FREEZER mode, the set temperature shown on the display does not change, however the temperature of the freezer zone will decrease continuously;
- The QUICK FREEZER mode can be exited after a continuously running for 24hrs or when the temperature of the freezer zone sensor is below -28°C or when the button is touched again, and the icon above this button will be Off.
- Freezer zone button: By touching this button, the icon above it will be On and the freezer zone temperature setting will be allowed;
- Temp.adjust button(-): After allowing the temperature setting of the freezer zone, FLEX zone or fridge zone, the corresponding set temperature will decrease by 1°C by touching this button each time, which will not work when reaching the minimum temperature;
- Temp.adjust button(+): After allowing the temperature setting of the freezer zone, FLEX zone or fridge zone, the corresponding set temperature will increase by 1°C by touching this button each time, which will not work when reaching the maximum temperature;
- Fridge zone button: By touching this button, the icon above it will be On and the fridge zone temperature setting will be allowed;
- FLEX zone button: By touching this button, the icon above it will be On and the FLEX zone temperature setting will be allowed;
- Quick cool zone button: The quick cool mode will be enabled by touching this button, and the icon above this button will be On;

INSTRUCTIONS FOR USE
Operation

- Under the quick cool mode, the set temperature shown on the display is 2°C;
- The quick cool mode can be exited after a continuously running for 150min or when the button is touched again, and the icon above this button will be Off.
- LOCK button: The display will be locked or unlocked by pressing and holding this button for 3s. When the icon above this button is Off, it means that the display is unlocked. When the icon above this button is On, it means that the display is locked. The above button operations are only allowed when the display is unlocked.
- After opening the door, the display indicator will be On, which will be Off when the buttons are left untouched for 30s. The display indicator will be On again by touching any button or closing and then opening the door again.
- Display mode: When the display is unlocked and when touching "ULTRA FREEZER button"+"Quick cool zone button" simultaneously for 5s, the display will beep once and the set temperature will be 0F. After entering the display mode, the temperature of the fridge will not decrease, however, the LED lights still work for normal control. Under the display mode, when touching the "ULTRA FREEZER button" and "Quick cool zone button" simultaneously again for 5s, the display will beep once and the set temperature will be normal, and the normal refrigeration control of fridge will be allowed again.
- If the refrigerator door is continuously open for more than 1 minute, the display panel will sound three consecutive alarm sounds to remind the user to close the refrigerator door; If the refrigerator continues to remain open, three alarm sounds will sound every 30 seconds. When the refrigerator doors are closed, the alarm sound when opening the door disappears.
- Power off memory: The refrigerator has a power off memory function, which can remember the temperature and function settings of the user's refrigerator (20 seconds after the user completes the setting, the setting takes effect and is memorized).



- **All button should be operated under the unlocked status, except for the cancellation of alarm sound; otherwise, the buzzer will have prompt sounds, the icons will be locked and flicker;**

INSTRUCTIONS FOR USE
Operation

Instructions for storing foods

- When storing freezing foods, put them to the inside of freezing chamber, other than the bottle rack.
- Do not put bottled or canned foods into the freezing chamber to prevent frost cracking. Before putting hot foods into the refrigerator, cool them to room temperature first; otherwise, they will increase power consumption.
- Mark the freezing date on the packaging bag according to different storage lives of foods, so as to prevent foods from exceeding the time limit.
- Divide foods into proper pieces and package them separately, which are easy to freeze thoroughly and will not frozen together.
- The packaging materials shall be odorless, airtight, watertight and pollution-free, so packaged foods are not easy to taint by other odor, without quality reduction.
- Do not put too many fresh foods into the freezing chamber once, preferably not exceeding the freezing capacity value of refrigerator.
- Melted foods can not be frozen again, unless they are made into dishes; otherwise, their service quality will be affected.
- Glass bottles or glass containers shall not be placed into the freezing chamber or at the air outlet of refrigerating chamber duct; otherwise, they may explode.
- Foods can not block the air outlet; otherwise, abnormal air circulation will be caused.

Storage of foods

- To achieve the most efficient use of energy for your appliance, combine the drawers, glass shelves and door shelves as shown in the Product components page.
- Note: Food is not allowed to touch directly all surfaces inside the appliance. It has to be wrapped separately in aluminum sheet or in cellophane sheet or in airtight plastic boxes.
- Precautions for internal and external cleaning of refrigerator:
- Before cleaning, always turn off the power switch, disconnect the power plug.
- During cleaning, make sure that no water will enter the switch, control panel, door lamp and top control box.
- Remove dirt from the outside of refrigerator with mild cleaner, then wipe with clean soft cloth, and let the refrigerator dry naturally.
- When cleaning door sealing strip, always use clean water, wipe with dry cloth and let it dry naturally. Wet soft cloth with warm water or neutral cleaner to wipe the refrigerator body except the door sealing strip.
- It is forbidden to flush the refrigerator directly with water,which will affect electrical insulation properties, etc.
- It is forbidden to clean the refrigerator with metal wipers,ware brushes, coarse abrasive cleaners,strong alkaline detergents,or flammable or toxic cleaning fluids.
- A temperature setting that is too high or too low can reduce the shelf life of your food. This leads to greater food waste.
- Set the temperature in the fridge to +5 °C and fill the fridge in such a way that the temperature conditions inside are optimally utilised, guaranteeing optimal food storage.

INSTRUCTIONS FOR USE
Operation

- The following tips show you how you can store foods in your appliance to keep them in the best possible condition over the longest possible period. This will mean that you avoid food waste:
  - Upper door shelves: Cheese and spreadable butter
  - Middle door shelves: Jams, jars, small bottles, tubes and eggs
  - Lower door shelves: Drinks cartons and bottles. Position full containers closer to the hinge in order to reduce the strain on the door.
  - Glass shelf vegetable drawer: Fresh meat, game, poultry, bacon, cold meats and raw fish. The recommended storage time for meat is no more than 24 hours

Note: Food is not allowed to touch directly all surfaces inside the appliance. It has to be wrapped separately in aluminum sheet or in cellophane sheet or in airtight plastic boxes.

Freezing and storing food in the freezer compartment

- To store deep-frozen food.
- To make ice cubes.
- To freeze food.
- **Note**: Ensure that the freezer compartment door has been closed properly.

Purchasing frozen food

- Packaging must not be damaged.
- Use by the 'use by /best before/best by/' date.
- If possible, transport deep-frozen food in an insulated bag and place quickly in the freezer compartment.

Storing frozen food

- Freezing means reducing the core temperature of fresh, room-temperature food to frozen as quickly as possible.
- for best results 'flash-frozen'. If not cooled quickly enough, the food will be "killed by frost", i.e. the structure will be destroyed. A constant storage temperature of –18 °C is needed to maintain the food's consistency, taste and nutritional value.
- Freezing food has a positive effect on its shelf life. You can also avoid food waste in this way.
- Set the temperature in the freezer to –18°C and fill the fridge in such a way that the temperature conditions inside are optimally utilised, guaranteeing optimal food storage:
- Place food to be frozen in the freezer drawers or Glass shelf door shelves.
- The following foods are suitable for freezing:
- Cakes and pastries, fish and seafood, meat, game, poultry, vegetables, fruit, herbs, eggs without shells,dairy products such as cheese and butter, ready meals and leftovers such as soups, stews, cooked meat and fish, potato dishes, souffles and desserts.
- The following foods are not suitable for freezing:
- Types of vegetables, which are usually consumed raw, such as lettuce or radishes, eggs in shells, grapes,whole apples, pears and peaches, hard-boiled eggs, yogurt, soured milk, sour cream, and mayonnaise.

Recommended storage times of frozen food in the freezer compartment

- These times vary depending on the type of food. The food that you freeze can be preserved from 1 to 12 months (minimum at -18°C).

FOOD	STORAGE TIME
Bacon, casseroles, milk	**1** month
Bread, ice cream, sausages, pies, prepared shellfish,oily fish	**2** month
Non-oily fish, shellfish, pizza, scones and muffins	**3** month
Ham, cakes, biscuits, beef and lamb chops, poultry pieces	**4** month
Butter, vegetables (blanched), eggs whole and yolks,cooked crayfish, minced meat (raw), pork (raw)	**6** month
Fruit (dry or in syrup), egg whites, beef (raw), whole chicken, lamb (raw), fruit cakes	**12** month

CLEANING AND MAINTENANCE

Defrosting

This production has automatic defrosting function, without manual operation.

Cleaning

Precautions for internal and external cleaning of refrigerator:

- - Before cleaning, always turn off the power switch, disconnect the power plug.
- During cleaning, make sure that no water will enter the switch, control panel, doorlamp and top control box.
- Remove dirt from the outside of refrigerator with mild cleaner, then wipe with clean soft cloth, and let the refrigerator dry naturally.
- When cleaning door sealing strip, always use clean water, wipe with dry cloth and let it dry naturally. Wet soft cloth with warm water or neutral cleaner to wipe the refrigerator body except the door sealing strip.
- It is forbidden to flush the refrigerator directly with water,which will affect electrical insulation properties, etc.
- It is forbidden to clean the refrigerator with metal wipers,ware brushes, coarse abrasive cleaners,strong alkaline detergents,or flammable or toxic cleaning fluids.

After cleaning, connect the power plug of refrigerator,and connected with the refrigerator.

General information

On vacation

- When you want to leave for vacation, you had better to make the refrigerator operate continuously and leave foods that can be stored for a short time. If you want to stop the refrigerator, remove all foods, disconnect the power plug, clean the inside of refrigerator fully, and open the door to avoid producing abnormal odors.

At power failure

- Generally, short-term power failure will not affect the temperature of the refrigerator sharply. However, if power failure lasts for a long time, you shall reduce the opening frequency of refrigerator, and shall not put fresh foods into the refrigerator (prevent rise in the temperature of refrigerator from speeding up).
- If you know power failure is coming, you can turn on the “Super Freezer” function in advance to keep the temperature of refrigerator to the lowest value.

Shutdown

- Generally, it is not suggested to stop refrigerator or turn off the power switch; otherwise, the life of refrigerator may be affected.

Energy saving tips

- Make sure to keep the refrigerator away from heat source and direct sunlight.
- Before storing hot foods, cool them to room temperature and then put into refrigerator.
- Close the door timely, reduce the opening frequency, and shorten the opening time.
- When unfreezing frozen foods, you can put them into the refrigerating chamber, which will assist in refrigeration of the refrigerating chamber.
- Make sure that the temperature sensor is not covered or blocked by foods,and keep proper distance with foods.

TREOUBLESHOOTING

Normal phenomena



Button failure

- Controllare il pannello di controllo per verificare che non sia attiva la funzione blocco. In questa modalità tutti i pulsanti sono disabilitati.

Low voltage,the compressor can't start

- You should purchase pressurizer of more than 1000W when the area of the appliance installation,that's better to protect your fridge.

Long time to start

- When the ambient temperature too high, it will take long time to start the appliance.

Middle beams feel hot

- Middle beams feel hot after a period of time of the appliance run,it belongs to the normal phenomenon.

Dew drops

- When external air flows into the cool inner surface of the fridge,dew drops can be formed. If the humidity of the installed location is high or during the rainy season,dew drops can form on the outer side of the fridge.This is a natural phenomenon that occurs during the humid weather,Wipe the water drops with a dry cloth.

Noise

- When you operate the fridge for the first time,the fridge will operate at high speed to cool fast and the sound can seem louder.When the internal temperature falls below a certain level,the noise will subside. When the operation of the compressor is starting or ending;- various parts expanding/ contracting or various control devices operating or temperature change within the fridge,you will hear the sounds,these are normal sounds.

Compressor hot

- When working,the temperature of the compressor outer is more than touch 80°C the compressor,it may cuase serious injury.

Compressor long time running

- When the ambient temperature too high or put too much fresh foods into the fridge,it will take long time to cool down until the appliance run at the setting temperature.

TREOUBLESHOOTING

Before calling for service, review this list. It maysave you both time and expence. This list includes common occurences that are notthe result of defective workmanship or meterials in this appliance.

FAULT	POSSIBLECAUSE	REMEDIAL ACTION
No display on the display pannel	The mains plug of the appliance is not in the socket properly.	Check whether the power is on.
Alarm sound	Door is slightly open or not close more than 1 minute.	Close the door completely.
The compressor do not work	It's under defrosting mode.	It's normal for defrosting.
	Power is not connectd well.	Check whetwr.
Compressor runs too long	The fridge has recently been disconnect for a period of time;	it takes some hours for the fridge to cool down completelyl;
	Put too much fresh or not food;	Hot food will cause the fridge to run longer unitil the desired temperature is reached;
	Doors are opened too frequently or too long	Warm air entering the fridge to run longer. Open the door less often.
Vibrating nois	Floor is uneven or weak;	Be usre floor is level and solid canade-quately support fridge;
	Items placed on the top of the fridgeare vibrating;	Remove items;
	Fridge is touching wall or gabinets.	Move fridge so that does not touch the wall or cabinets.

Climate class:

- Extended temperate(SN): 'this refrigerating appliance is intended to be used at ambient temperatures ranging from 10 °C to 32 °C';
- Temperate(N): 'this refrigerating appliance is intended to be used at ambient temperatures ranging from 16 °C to 32 °C';
- Subtropical(ST): 'this refrigerating appliance is intended to be used at ambient temperatures ranging from 16 °C to 38 °C';
- Tropical(T): 'this refrigerating appliance is intended to be used at ambient temperatures ranging from 16 °C to 43 °C';
- Note: More data information, please scan the QR code on the energy label.

INSTALLATION

Glass shelves

1. Grasp the front end of the glass shelf with both hands,Lift up as a whole until the glass is resting. The rear end of the frame cannot be lifted (at the limit position),At this point, the glass shelf claws are completely detached,Remove the card slot and lift the glass throughout the entire process. The glass shelf is approximately 7mm.
2. Just pull out the glass shelf outwards





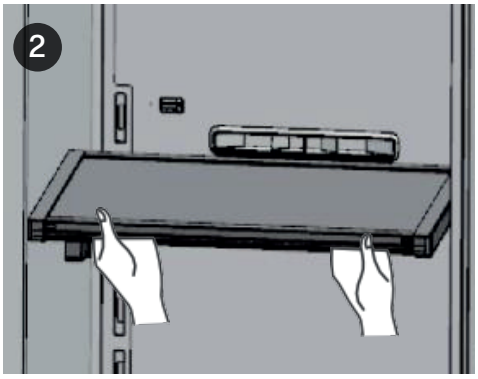

Door rack

1. Grasp both sides of the door rack with both hands and lift it up as a whole until the rear end of the door rack gets stuck.The claw completely disengages from the slot, and the entire process requires lifting the door rack by about 7mm.
2. Just pull out the door rack outwards.

- **Just pull out the door rack outwards.**

***Tips**

1. The transparent body of the bottle frame and the aluminum alloy hanger can be separated, please pay attention when disassembling;Attenersi alle fasi di installazione e i requisiti del frigorifero (il Prodotto) riportati di seguito, per garantirne il normale funzionamento.
2. The bottle frame design has a function of preventing accidental contact and detachment, and during disassembly, the lifting distance is too high.It is highly likely that the bottle frame cannot be pulled out outwards. It is recommended to remove the bottle in this case. Move the box slightly down before attempting to pull it out.

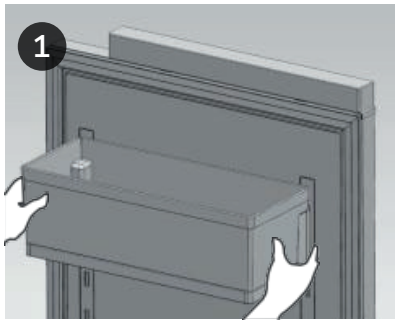

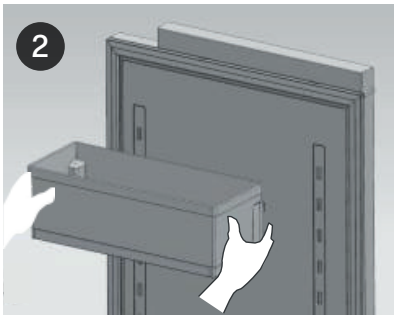

INSTALLATION

Notes before Installation

Please follow the installation steps and requirements of the refrigerator (the Product) below, to ensure its normal functioning.

Installation of power supply

- Do not place the Product under direct sunlight, or near the heating electric appliance, such as hearth, oven or dish-washing machine.

Installazione dell'alimentazione elettrica

- The Product should be such installed to plug/unplug the power plug easily.
- The Product's plug should be inserted in a specific socket, to avoid accidental power failure. Do not insert the power plug of other electric appliances in the specific socket of the Product, nor use the extended line or multiport adapter, for the multiport adapter may fall down from the wall due to the total weight of several power lines.
- Check the Product's nameplate to master the requirements of power supply. The Product must be grounded properly.

List of installation accessories

Bottom air inlet/outlet hood	Power cord
Q.tà: 1 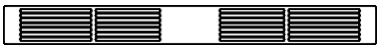	Q.tà: 1 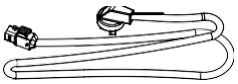
Upper decoration hood	Lower decoration hood
Q.tà: 4 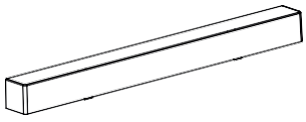	Q.tà: 3  Q.tà: 1 (con foro) 

Box fixing frame	Cover of box fixing frame	Cabinet fixing plate	Coss recessed flat head tappping screw	Screw cap
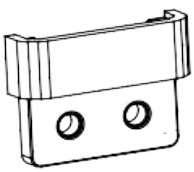	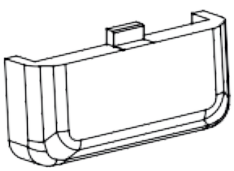	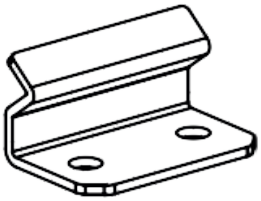	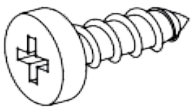	
Qty.: 8	Qty.: 8	Qty.: 8	Qty.: 52	Qty.: 8

INSTALLATION

Installation tools

Installation tools
(the following installation tools are carried by professional installers)

1. Allen wrench (M3);
2. Electric gun;
3. Tape;
4. Hexagon nut wrench;
5. Tooling platei;
6. Limit guide piece;

Cabinet inspection

1. Check if the dimensions of cabinets and door plate conform to the requirements (refer to the dimension drawing);;
2. Controllare il cavo di alimentazione (vedere il disegno);
3. Check if the power socket has normal power supply. The socket should be placed outside the refrigerator cabinet and close to the cabinet hole, to ensure easy plugging/unplugging of power socket
4. Check if the ground is flat;

Make sure the requirements above are met before continuing the next step of installation.

Refrigerator unpacking

1. Remove the Product's package box and take down the top foam; the bottom air inlet/outlet hood is located in the top foam;
2. Remove the protective foam at lateral sides of the Product and inside the Product;
3. Uplift the Product together with others, in order to remove the foam pad under the Product;
4. Open the Product's door and take out the articles, such as installation accessories..

INSTALLATION

Instructions of cabinet and refrigerator

Warning:
The Product should be installed and fixed by specification to avoid hazards due to instability.

Fixation of refrigerator and cabinet

1. Open the Product's door, insert the 4 guide pieces into the two holes of upper and lower four hinges (guide pieces are not placed in the four hinges inside the Product), (refer to Fig. 1), then close the door.

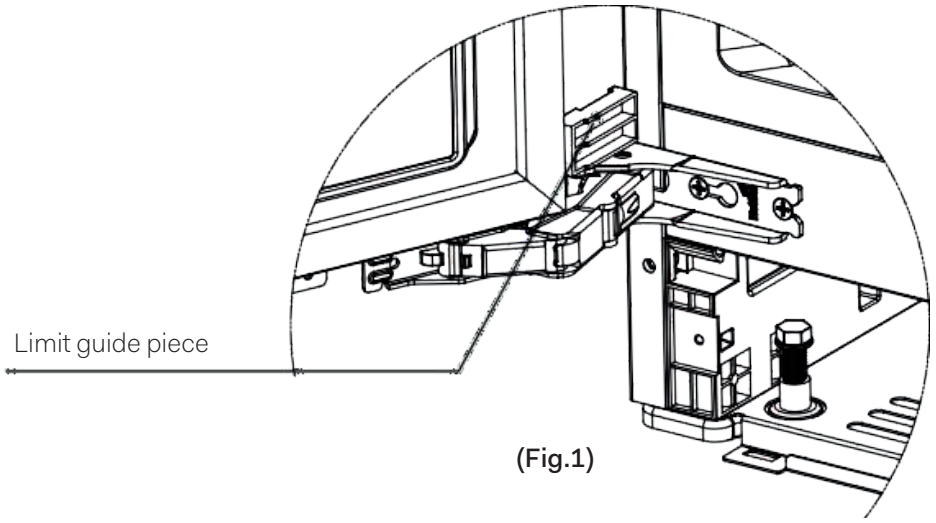

(Fig.1)

2. Insert the power cable into the lower jack socket behind the product; insert the plug of power cable to the reserved socket through the cabinet hole..
3. Push the Product into the cabinet and pull the power cable at the same time, to avoid knotting and collision of power cable in the cabinet.
4. Stop pushing the Product when the limit guide pieces on the lower left/right hinge are fitted with the cabinet surface. (Refer to Fig. 2).

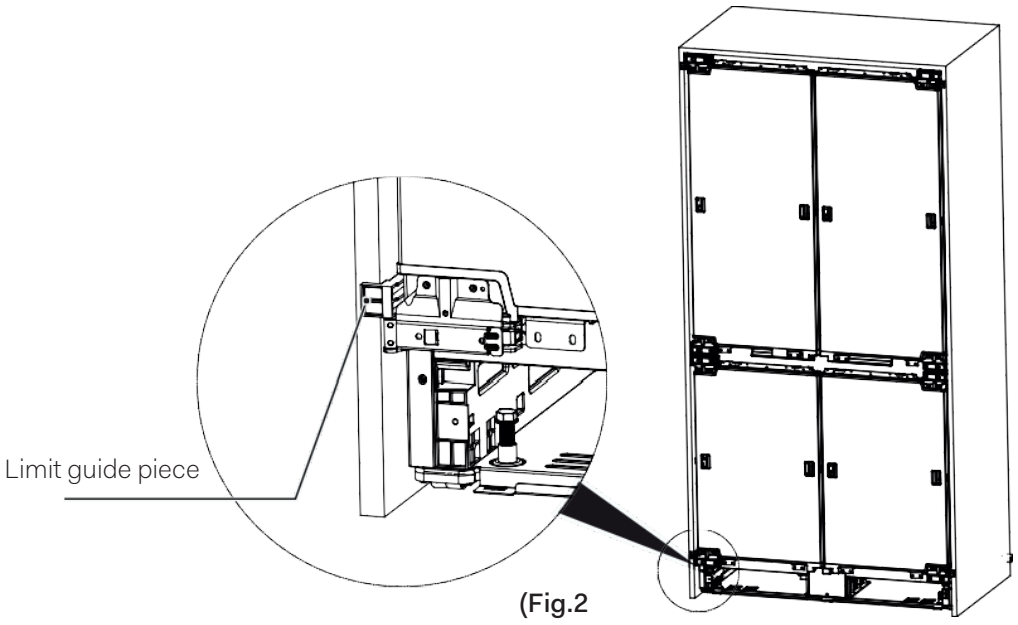

(Fig.2

INSTALLATION
Instructions of cabinet and refrigerator

Rotate the nuts on adjustment pin with a hexagon nut wrench clockwise to uplift the front part of the Product, or rotate the nuts anticlockwise to lower the front part. Adjustment is done when both upper and lower limit guide pieces are fitted with the cabinet surface (Refer to Fig. 3).

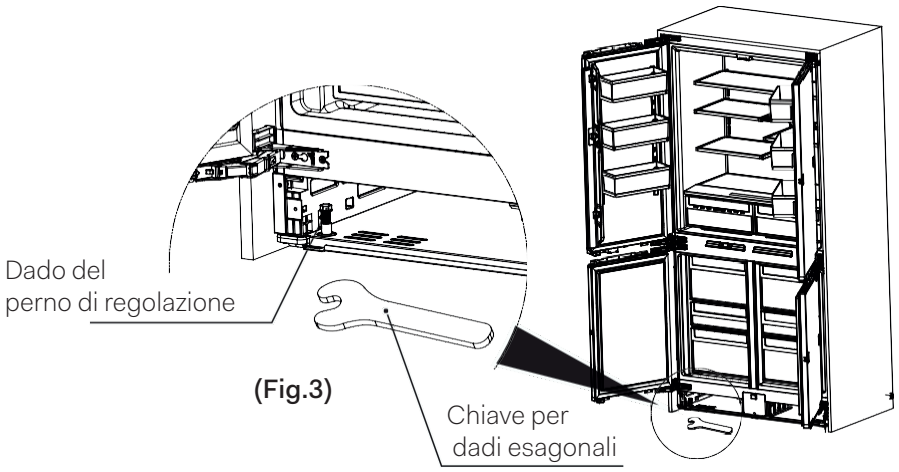

(Fig.3)

5. Open the Product's door, take down the limit guide piece of one hinge, and install the box fixing frame with two self-tapping screws. Replace the limit guide pieces of other hinges one by one (refer to Fig. 4).

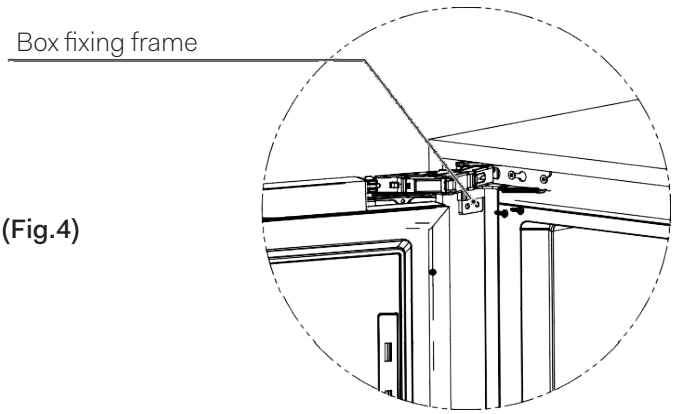

(Fig.4)

6. Install the cover of box fixing frame after it is fixed. (Refer to Fig. 5).

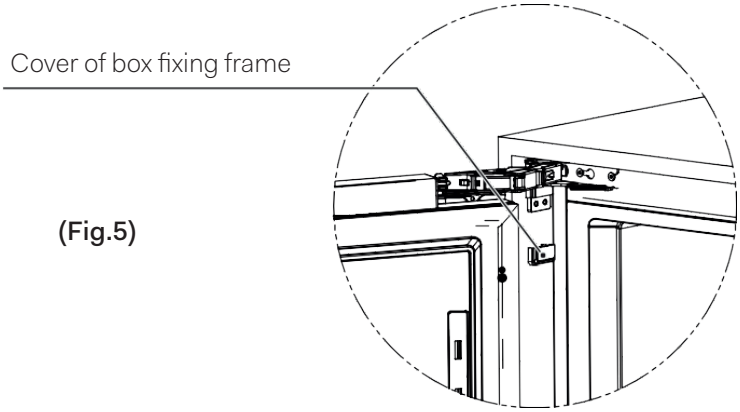

(Fig.5)

INSTALLATION
Instructions of cabinet and refrigerator

1. Install the door handle onto the cabinet door.
2. Measure the distance from fixing plate to cabinet top with a tape.
3. Firstly, install the two cabinet doors on the Product, loose and remove the hexagon flange nut. Take down the upper fixing plate on refrigerator door (refer to Fig. 6).

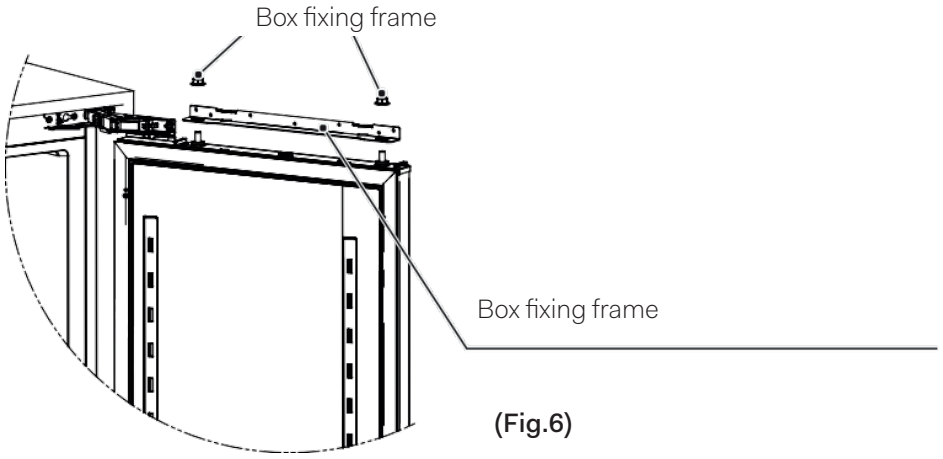

(Fig.6)

4. Fixation of upper fixing plate and cabinet door: Place the upper fixing plate onto the cabinet door, until the distance between the fixing plate and upper edge of cabinet door reaches the distance that is measured in the previous step; put the tooling plate against the door handle side, then put the upper fixing plate against the limit surface of tooling plate, confirm the position of fixing plate on the cabinet door; fix the upper fixing plate and cabinet door with flat head self tapping screws. (Refer to Fig. 7)

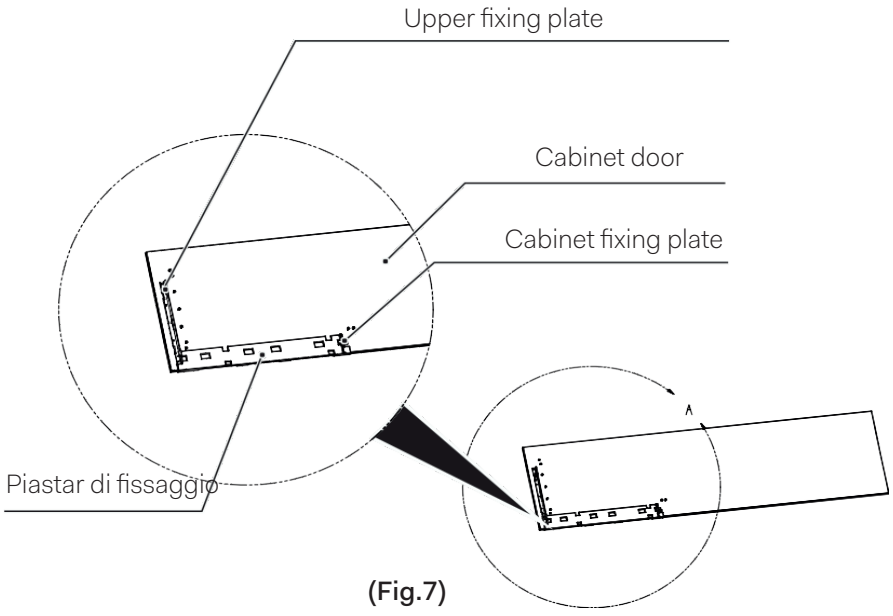

(Fig.7)

5. Fixation of cabinet fixing plate and door: Put the tooling plate against the cabinet handle side, and put one side against the upper fixing plate; put the cabinet fixing plate into the corresponding slot of tooling plate, then fix the cabinet fixing plate and cabinet door with flat head self tapping screws.

INSTALLATION
Instructions of cabinet and refrigerator

Put one end of tooling plate against the handle side, insert the installed cabinet fixing plate into the corresponding slots of tooling plate, put the other cabinet fixing plate into the corresponding slots of tooling plate; then fix the cabinet fixing plate and door with flat head self tapping screws (refer to Fig. 8).

After the two cabinet doors are mounted, hang the two doors on the refrigerator door (refer to Fig. 9).

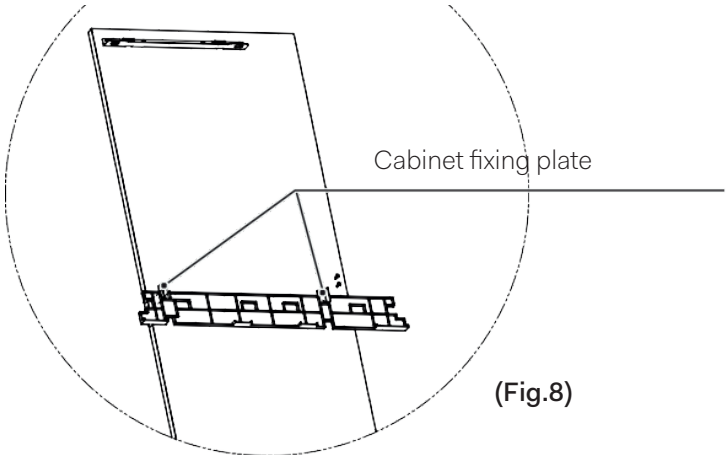

(Fig.8)

6. The lower two cabinet doors can be installed and fixed in the same way as the cabinet doors above.

7. Install cabinet fixing plates to the lower cabinet doors, suspend two cabinet doors on the Product. (Refer to Fig. 9)

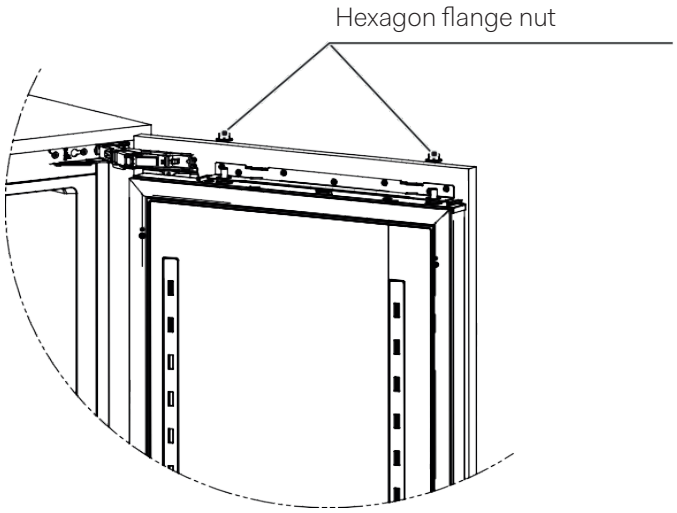

(Fig.9)

INSTALLATION

Instructions of cabinet and refrigerator

Adjustment of cabinet door

1. Vertical adjustment of cabinet door: Rotate the refrigerator adjustment bolts clockwise/anticlockwise with an Allen wrench, to move the cabinet door up or down.
2. Horizontal adjustment of cabinet odor: Rotate the lateral set screws of refrigerator door clockwise/anticlockwise with an Allen wrench, to move the cabinet to the left or right.
3. Front/back adjustment of cabinet door: 1 Front/back adjustment at upper side of cabinet door: Move the upper side of cabinet door to have front/back adjustment based on the front/back clearance between upper fixing plate and refrigerator; 2 Front/back adjustment at middle side of cabinet door: Move the cabinet door to the front/back until it reaches a proper position, then fasten the hex socket set screw at lateral sides of refrigerator door; 3 Front/back adjustment at
4. lower side of cabinet door: Make adjustment based on the front/rear clearance between the lower fixing plate and screws on fixing plate.

The adjustment above should be calibrated repeatedly to reach an acceptable status.

Fixation of cabinet door and refrigerator door

1. Fasten the hexagon flange nuts on the upper fixing plate; (Refer to Fig. 9)

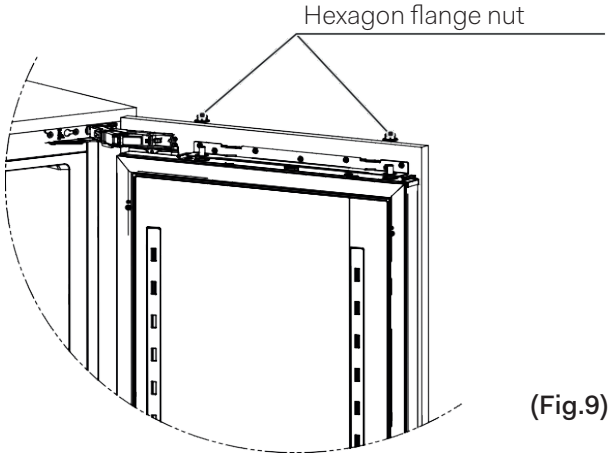

(Fig.9)

2. Fasten the lateral set screws and hex socket set screws on refrigerator door (refer to Fig. 10).

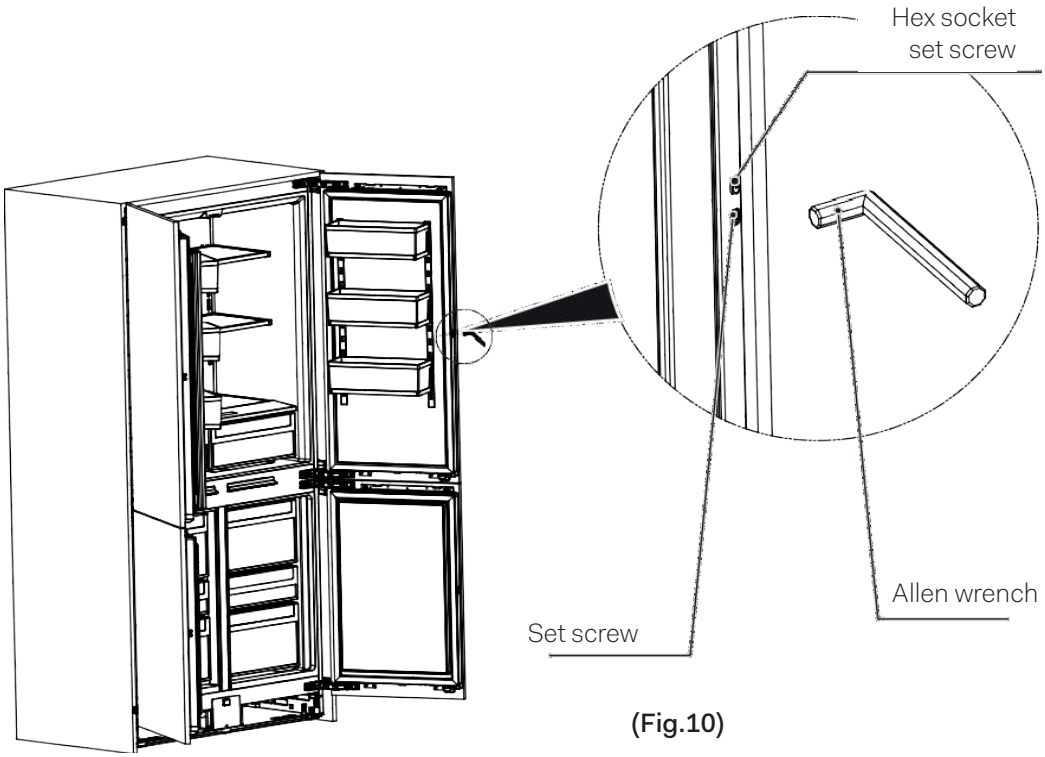

(Fig.10)

3. Slightly loosen the fixed hex socket set screws of lower fixing plate and refrigerator door, until the lower fixing can be moved to all directions; then fix the lower fixing plate and cabinet door with flat head self tapping screws. Adjust the cabinet door to a proper position and then fasten the socket head cap screws. (Refer to Fig. 11)

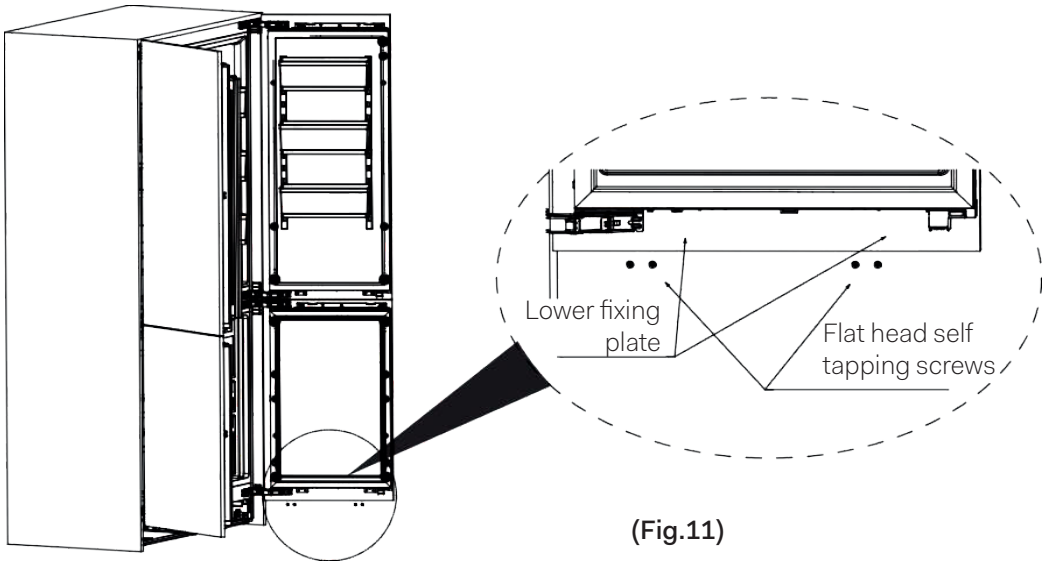

(Fig.11)

INSTALLATION

Instructions of cabinet and refrigerator

Installation of refrigerator accessories

1. Insert the upper/lower decoration hood to the upper/lower edge clip of the Product respectively

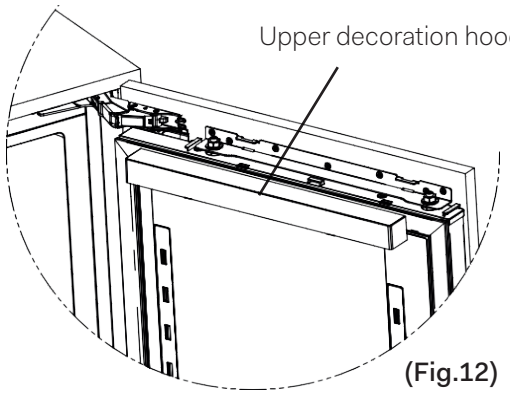

(Fig.12)

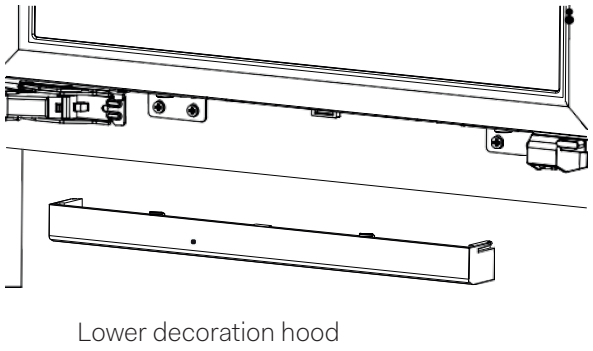

(Fig.13)

(Refer to Fig. 12, 13)

2. Insert the bottom air inlet hood into the lower part of the Product. (Refer to Fig. 14)
Note: The air inlet/outlet hood at bottom should not be blocked.

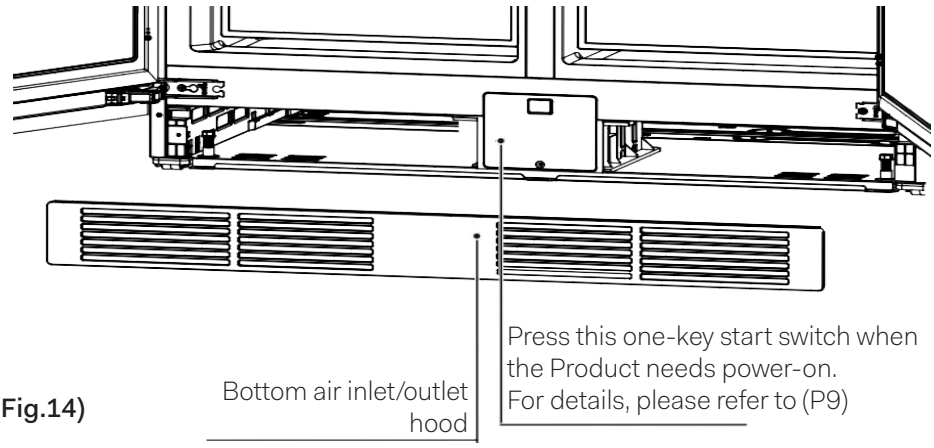

(Fig.14)

3. Install the screw cap at the lateral notch of refrigerator door. (Refer to Fig. 15)

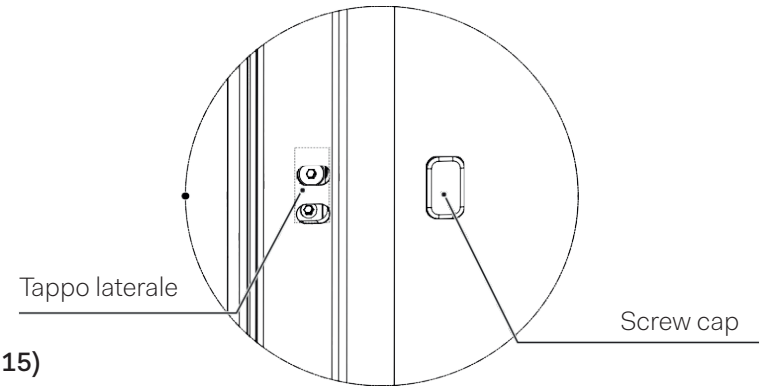

(Fig.15)

ILVE S.p.A

Via Antoniana 100
35011 Campodarsego
Padova – Italia

T. +39 049 9200990
F. +39 049 9201010

www.ilve.com