EN

REFRIGERATOR

R91CD

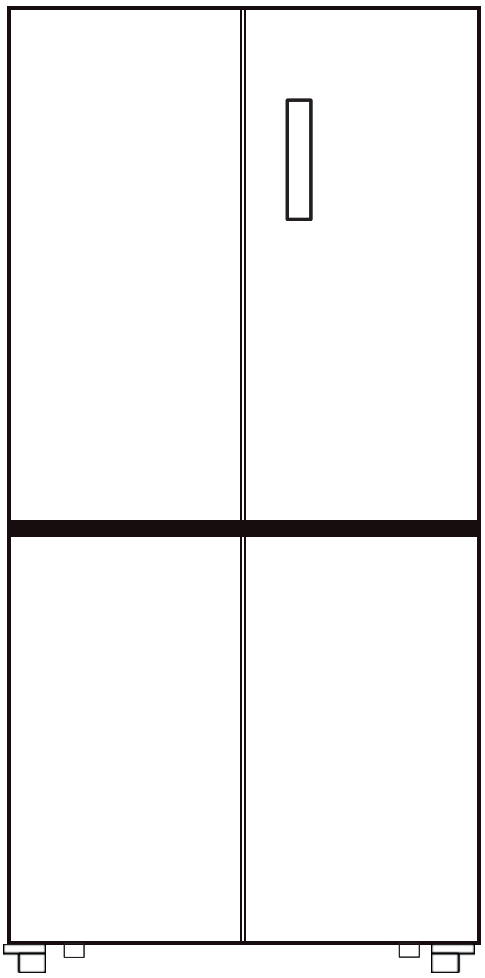

USER – Use and Maintenance

INSTALLER – Installation and Maintenance

ILVE

cod. EI33960740000EN
20/2024

INDEX

USER

04 IMPORTANT SAFETY WARNINGS

06 Basic safety symbol

07 Safety and warning information

09 INSTRUCTIONS FOR USE

09 Product features

12 Operation

18 CLEANING AND MAINTENANCE

19 TROUBLESHOOTING

INSTALLER

21 INSTALLATION

21 Recessed installation

22 Connection

IMPORTANT SAFETY WARNINGS

CAUTION

- This appliance can be used by children aged from 8 years and above and persons with reduced physical, sensory or mental capabilities or lack of experience and knowledge if they have been given supervision or instruction concerning use of the appliance in a safe way and understand the hazards involved. Children shall not play with the appliance. Cleaning and user maintenance shall not be made by children without supervision.
- Children aged from 3 to 8 years are allowed to load and unload refrigerating appliances.
- This appliance is not intended for use by persons (including children) with reduced physical, sensory or mental capabilities, or lack of experience and knowledge, unless they have been given supervision or instruction concerning use of the appliance by a person responsible for their safety.
- Children should be supervised to ensure that they do not play with the appliance. The refrigerant isobutene(R600a) is contained within the refrigerant circuit of the appliance,a natural gas with a high level of environmental compatibility,with which is nevertheless flammable. During transportation and installation of the appliance, ensure that none of the components of the refrigerant circuit becomes damaged. The refrigerant (R600a) is flammable.

WARNING



Symbol ISO 7010 W021 Warning; Risk of fire/flammable materials!

1. WARNING: The appliance must be positioned so that the plug is accessible.
2. WARNING: If the power cord is damaged, it must be replaced by the manufacturer,its service agent or similarly qualified person to avoid any hazards.
3. WARNING: Keep ventilation openings, in the appliance enclosure or in the built-in structure, clear of obstruction.
4. WARNING: Do not use mechanical devices or othermeans to accelerate the defrosting process, other than those recommended by the manufacturer.
5. WARNING: Do not damage the refrigerant circuit.
6. WARNING: Do not use electrical appliances inside the food storage compartments of the appliance, unless they are of the type recommended by the manufacturer.
7. WARNING: This unit uses R600a as the refrigerant and cyclopentane as the foaming agent,both of these materials are easily burnt, when discarding the unit it should be kept away from sources of extreme heat.
8. WARNING: Danger of electrical shock,the unit is used yellow-green grounding wire of this appliance must be grounded before operation.
9. WARNING: When the refrigerator is discarded after use please follow all local laws and regulations.
10. WARNING: The refrigerant and insulation blowing gas are flammable. Disposing of the refrigerant can only be done at authorized waste disposal centers. Do not expose the refrigerant or insulation to extreme heat or an open flame.
11. WARNING: Do not store explosive substances such as aerosol cans with a flammable propellant in this appliance.
12. WARNING: When positioning the appliance, ensure the supply cord is not trapped or damaged.

13. WARNING: Do not locate multiple portable socket- outlets or portable power supplies at the rear of the appliance.
14. WARNING: To avoid contamination of food, please respect the following instructions:

    - Opening the door for long periods can cause asignificant increase of the temperature in the compartments of the appliance.

    - Clean regularly surfaces that can come in contact with food and accessible drainage systems.

    - Clean water tanks if they have not been used for 48h; flush the water system connected to a water supply if water has not been drawn for 5 days.

    - Store raw meat and fish in suitable containers in the refrigerator, so that it is not in contact with or drip onto other food.

    - Two-star frozen-food compartments are suitable for storing pre-frozen food, storing or making ice-cream and making ice cubes.

    - One-, two- and three-star compartments are not suitable for the freezing of fresh food.

    - If the refrigerating appliance is left empty for long periods, switch off, defrost, clean, dry, and leavethe door open to prevent mould developing within the appliance.
15. WARNING: Risk of child entrapment. Before you throw away your old refrigerator or freezer:

    - Take off the doors.

    - Leave the shelves in place so that children may not easily climb inside.
16. WARNING: Before performing any type of installation or cleaning,disconnect the refrigerator from the power source and reset the temperature controls to the desired setting(s).

    When you are finished, reconnect the refrigerator to the electrical source and reset the temperature controls to the desired setting.
17. WARNING:This appliance is intended to be used in household and similar applications such as

    - staff kitchen areas in shops,offices and other working environments;

    - farm houses and by clients in hotels,motels and other residential type environments;

    - bed and breakfast type environments;

    - catering and similar non-retail applications.
18. The new hose-sets supplied with the appliance are to be used.Anyold hose-sets should not be re-used.
19. WARNING:fill with potable water only.
20. WARNING: Connect to potable water supply only. Thewatersupplysystemmustbeinstalledand connected byaprofessionaltechnician.

    Connecttherefrigeratorwith thecoldwaterpipe:
    Min. pressure: 1.4bar; Max. pressure: 6.9bar;

IMPORTANT SAFETY WARNINGS

Basic safety symbol

This guide contains many important safety messages. Always read and obey all safety messages.



This is the safety alert symbol.It alerts you to warnings that will inform you of any potential hazards that could hurt or kill you. These messages will also help protect your unit from damage. All safety messages will be preceded by the safety alert symbol and the hazard signal word DANGER,WARNING,or CAUTION.

These words mean:



DANGER — You could be killed or seriously injured if you don't follow the instructions.



WARNING — You may be killed or seriously injured if you don't follow the instructions.



CAUTION — Indicates an imminently hazardous situation which if not avoided, may result in minor or moderate injury or product damage only.

Appliance connection



CAUTION

This product is applicable to 220-240V/50Hz only,and the allowable voltage fluctuation rangeis 187V~242V.It can not be used if the voltage frequency is not 50Hz.
In order to ensure safety,the socket and its cable must be able to withstand the current of above 10A.

LED light

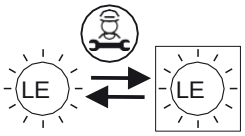

Replaceable (LED only) light source by a professional.

This product contains two light sources of energy efficiency class F.

Precautions

To reduce the risk of fire,electric shock,or injury to persons when using your product,basic safety precautions should be followed,including the following.

Read all instructions before using this appliance.

IMPORTANT SAFETY WARNINGS

Safety and warning information

- If you believe there is refrigerant leaking, do not touch the unit or the power outlet, ventilate the room and if possible turn your unit off using the circuit breaker. Call the manufacturer immediately.
- Refrigerant will cause serious injury when coming into contact with the skin or eyes. If this happens please immediately seek out medical treatment.
- Make sure to use a grounded power outlet.Consult a qualified electrician or service person if the ground-ing instructions are not completely understood,or if you have doubts on whether the appliance is properly grounded.
- Wait for 5 minutes or longer before reconnecting the power cord. Failure to do so may cause the freezer to fail.
- The incorrect grounding may cause breakdown and/or electric shock.
- A dedicated outlet should be used.Using several devices at one outlet may cause fire.
- Do not allow the power plug to face upward or to be squeezed at the back of the fridge. Water may be flown into or the plug may be damaged, which can cause fire or injury.
- Do not allow the power cord bent or pressed by the heavy object to be damaged.
- Unplug the power cord when cleaning,handling the interior lamp of the fridge. Failure to do so may result in a electric shock or other injury.
- Remove water or dust from the power plug with a dry clean cloth,do not use wet hands touch it and insert it with the ends of the pins securely connected.
- Do not use the fridge for non-domestic perposes(storing medicine or testing material,blood,using on a ship,etc.) It may cause an unexpected risk such as fire,electric shock,deterioration of stored material or chemical reaction.
- Do not use or store inflammable materials ether,benzene,alcohol,medicine,liquid propane gas,spray or cosmetics near or in the fridge.It may cause explosion or cause a fire.
- Do not put any glassware that is not design for use in a fridge or freezer inside. The glass may crack or break which can lead to injury.
- Do not place the heavy object or the dangerous objects such as:cup,flower vase,cosmetics,medicine or any containers with water in the fridge. It may be dropped and cause injury,fire or electric shock when opening or closing the door.
- Do not touch food or containers in the freezer with wet hands.It may cause frostbite.
- Do not spray water at the outside or the inside of the fridger do not clean it with benzene or thinner.
- Do not clean the unit with any acidic cleaners, abrasive brushes, sharp tools, and/or any cleaner that contains benzene.
- Do not use a drier to dry the inside of the unit,nor light a candle to remove odour.It may cause an explosion or fire.
- Do not cling to the door or the trays of the door.It may make the fridge fall down and cause serious injuries or even death. Especially,do not allow the children to do the above.
- Do not put ice in a thin crystal cup or ceramic ware.It may break cup or ceramic ware to cause injury.
- Do not allow anyone except a qualified service person to disassemble, repair, or alter the fridge. Unless directed by the manufacturer.It may cause injury,electric shock or fire.
- QueThis appliance is intended to be used in household and similar applications such as

  - staff kitchen areas in shops, offices and other working environments;

  - farm houses and by clients in hotels, motels and other residential type environments;

  - bed and breakfast type environments;

IMPORTANT SAFETY WARNINGS

- catering and similar non- retail applications.

- Do not install the fridge in a wet or high humidity environment.Failure to do so will cause premature deterioration, cause the unit to run more frequently and can cause an electrical shock.
- Install the appliance in a dry,well-ventilated room.
- The appliance should be placed close to the wall outlet,it is easy to cut off the power supply at the time of the accident.
- Do not expose the unit to extreme heat or any open flame.
- Keep your unit in a well ventilated area, make sure if the unit is built-in that there is adequate air flow around the unit.
- Do not cover or obstruct the exhaust area on the back of your unit, failure to do so may cause eclectically shock or injury. It may cause electric shock or injury.

INSTRUCTIONS FOR USE
Product features

	This unit container super freeze, energy-savings, noise reduction, optimal refrigeration are preset options for your unit.
Precise temperature control	Microcomputer control systems are able to separately control both the fridge and freezer more accurately.
Automatic defrosting	This unit is equipped with a program that controls the frequency and duration of defrosting your freezer. This will make sure that you never need to manually defrost the freezer.
LED display and temperature controls	The control board respectively displays the fridge and freezer temperatures. To change the setting in either section simply press the up or down arrow depending on the chance you would like made.
Tempered glass,safe and reliable	Tempered glass, is safe and reliable, easy to clean and durable.
Easy clean and removable door seal	The door seal(s) are easy to remove and clean, allowing the product to operate efficiently for longer.
Automatic ice maker	The refrigerator has the function of automatic ice making.

INSTRUCTIONS FOR USE
Product features

Components

The layout of items below are subject to change without notice, and may not look or come setup as seen in the picture below.

The appearance and specifications of the actual product may differ depending on the model.

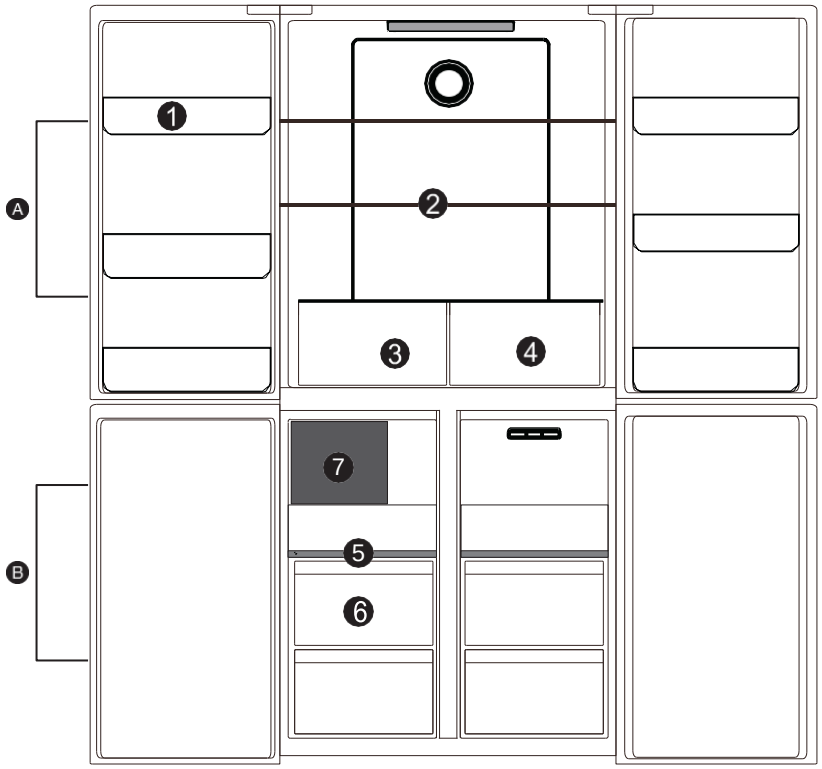

A Refrigerator compartment

1 - Refrigerator door rack
2 - Refrigerator glass shelves
3 - Crisper
4 - FLEX TEMP Drawer

B Freezer compartment

5 - Freezer half drawer
6 - Freezer drawer
7 - Ice maker

INSTRUCTIONS FOR USE
Product features

Installation dimension

Select a good location to place your appliance where it is flat and easy to use.
Avoid placing the unit near heat sources,direct sunlight or moisture.

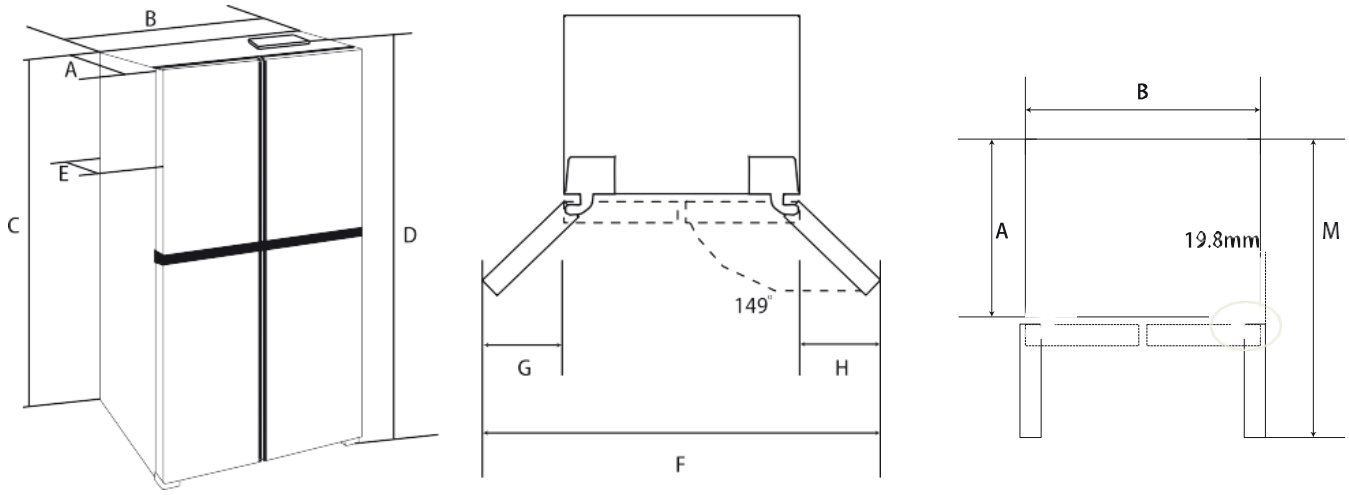

A	B	C	D	E	F	H	M
621	911	1774	1830	706	1661	393	1088

The above figures are a guideline for installation purposes. The actual dimensions of the unit may vary slightly.

To ensure that your unit works at peak efficiency please maintain sufficient space around your unit as outlined on the next page.

Before Use

Remove all of the packaging, including the foam backing at the bottom of the unit and the tape that fixes the shelves and door bins inside.

Place the refrigerator to a proper position, and adjust the feet to level. It is recommended to wipe out your unit with a warm soapy cloth and dry it thoroughly before use.

Place the refrigerator and adjust to level, clean it, let the refrigerator stand for above 4-6 hours, and then power the unit on. This helps make sure that the oil from the compressor has settled properly, and will help your unit run normally.

INSTRUCTIONS FOR USE
Operation

Starting

Connect the power cord, and turn on the power switch.
Upon startup for the first time, the screen will display respective set temperature values (the temperature of the fridge section is set to 5°C, the temperature of the freezer is set to-18°C). The default mode is energy saving upon startup: The screen displays for 20s and then goes off. This mode to save energy and prolong the service life of LED lights.

Control panel

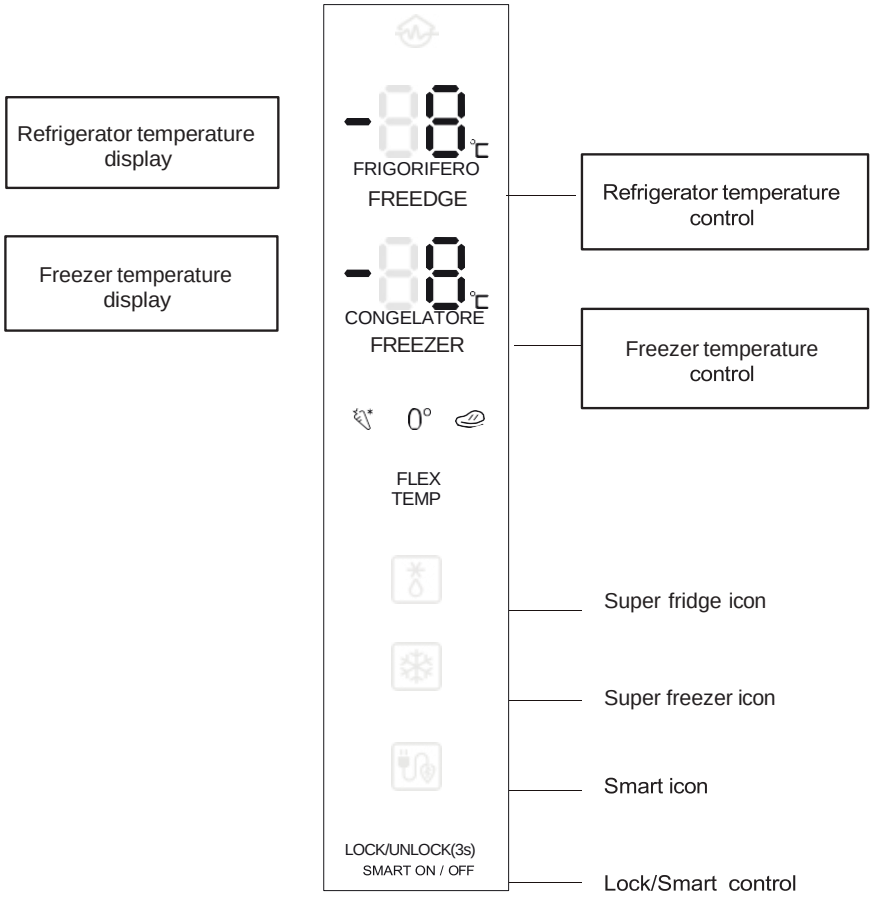

Feature selection

Each press of the “Lock/Smart control” button will cycle through the operating modes.

Smart Mode - the refrigerator will run at 5°c while the freezer will operate at -18°c,and the flex temperature drawer will run at 0°c,the 0° icon turn on.

Super freezer mode – When the super freezer mode is selected, the compressor will operate continuously to freeze foods faster, and keep them fresh.The super freezer mode will automatically turn off either after 24h of operation, or when the freezer reaches -28°C.The super freezer icon will turn off, and the freezer will continue to operate at the normal set temperature.

Super fridge mode – When the super fridge mode is selected, the fridge compartment reaches the set temperature in the shortest period,in order to keep the food as fresh as possible.under this mode,the set temperature of the fridge compartment locks on 2°C.The program runs 150mins maximally then exits automatically, the super fridge icon goes out,which represent the super fridge function is disable,the set temperature returns to the last one before the super fridge mode operates.

INSTRUCTIONS FOR USE
Operation

Freezer compartment settings

The default temperature of the freezer is -18°C. To change the temperature press the “FREEZER” button to cycle through the set temperatures.



FREEZER ➡ -18 →-19→-20→-21→-22→-23→-15→-16→-17→-18

CAUTION: Do not put fresh foods directly on the frozen foods.

Refrigerator compartment settings

The default temperature of the refrigerator is 5°C. To change the temperature press the “FRIDGE” button to cycle through the set temperatures.



FREEDGE ➡ 05 →04→03→02→08→07→06→05

FLEX TEMP setting

This product has a flex temperature drawer.

FLEX TEMP. ➡

- 0° Fresh mode: the flex temperature drawer will run at 0°C.
- Chill mode: the flex temperature drawer will run at -4°C.
- Green mode: the flex temperature drawer will run at 4°C.

Lock/Smart control

Press this button,you can set the mode:

LOCK/UNLOCK(3s)
SMART ON/OFF ➡

- Super fridge mode
- Super freezer mode
- Smart mode

Press this button for 3s to unlock/lock the display control.

Fridge compartment switch off/on

Long press”FRIDGE”button for 10 seconds to set fridge compartment on/off,when fridge compartment is switched off, the fridge temperature digital display will go off;under the fridge compartment switched off state,long press”FRIDGE”button for 10 seconds to restart fridge function.

INSTRUCTIONS FOR USE
Operation

Refrigerator chamber
The fridge compartment should mainly be used to store food that will be consumed in a short time.

1. Refrigerator door rack
2. Refrigerator glass shelves
3. Crisper
4. FLEX TEMP Drawer

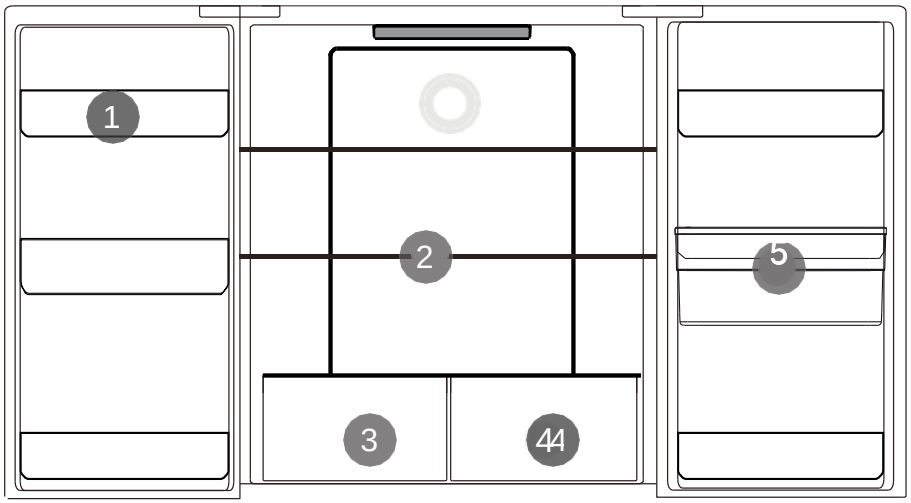

Freezing chamber
The freezing chamber is used to freeze foods,store deeply frozen foods and make ice cubes.It can preserve foods for a long time.

1. Ice maker
2. Ice storage drawer
3. Freezer halfdrawer
4. Freezer drawer

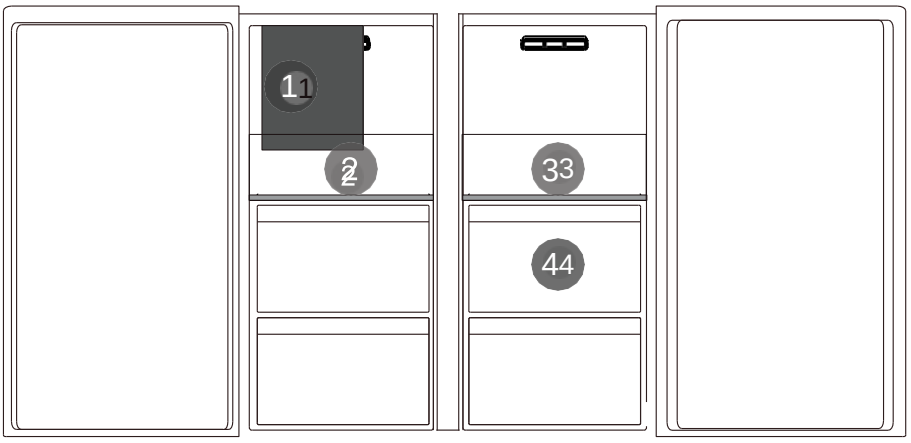

CAUTION
The food especially the oily food which stored in refrigerator ,please avoid the direct contact with the liner.When the interior stained with oil or oily food soup stains, should be cleaned immediately to avoid the long contact with the liner which may lead to the liner corrosion and cracking.

- wo-star (✻ ✻) rozen-food compartments are suitable for storing pre-frozen food, storing or making ice-cream and making ice cubes. (✻), two star (✻✻) and three star (✻✻✻) compartments are not suitable for the freezing of fresh food.
- If the refrigerating appliance is left empty for long periods,switch off, defrost, clean, dry, and leave the door open to prevent mould developing within the appliance.
- Please depend on the actual situation of the product.

INSTRUCTIONS FOR USE
Operation

Instructions for storing foods

⚠ CAUTION

- When storing freezing foods, put them to the inside of freezing chamber, other than the bottle rack.

- Do not put bottled or canned foods into the freezing chamber to prevent frost cracking. Before putting hot foods into the refrigerator, cool them to room temperature first; otherwise, they will increase power consumption.

- Mark the freezing date on the packaging bag according to different storage lives of foods, so as to prevent foods from exceeding the time limit.

- Divide foods into proper pieces and package them separately, which are easy to freeze thoroughly and will not frozen together.

- The packaging materials shall be odorless, airtight, watertight and pollution-free, so packaged foods are not easy to taint by other odor, without quality reduction.

- Do not put too many fresh foods into the freezing chamber once, preferably not exceeding the freezing capacity value of refrigerator.

- Melted foods can not be frozen again, unless they are made into dishes; otherwise, their service quality will be affected.

- Glass bottles or glass containers shall not be placed into the freezing chamber or at the air outlet of refrigerating chamber duct; otherwise, they may explode.

- Foods can not block the air outlet; otherwise, abnormal air circulation will be caused.

Storage of foods:

Your appliance has the accessories as the “Structure illustration” showed in general, with this part instruction you can have the right way to storage your food.The glass shelves and crisper can be removed to store food if needed.
Note: Food is not allowed to touch directly all surfaces inside the appliance. It has to be wrapped separately in aluminum sheet or in cellophane sheet or in airtight plastic boxes

Dairy foods and eggs

Most pre-packed dairy foods have a recommended ‘use by/best before/best by/ date stamped on them. Store them in the fridge compartment and use within the recommended time.

Red meat

Place fresh red meat on a plate and loosely cover with waxed paper, plastic wrap or foil. Store cooked and raw meat on separate plates. This will prevent any juice lost from the raw meat from contaminating the cooked product.

Poultry

Fresh whole birds should be rinsed inside and out with cold running water, dried and placed on a plate. Cover loosely with plastic wrap or foil
Poultry pieces should also be stored this way. Whole poultry should never be stuffed until just before cooking, otherwise food poisoning may result.

Fish and seafood

Whole fish and fillets should be used on the day of purchase. Until required refrigerate on a plate loosely covered with plastic wrap, waxed paper or foil. If storing overnight or longer, take particular care to select very fresh fish.
Whole fish should be rinsed in cold water to remove loose scales and dirt and then patted dry with paper towels. Place whole fish or fillets in a sealed plastic bag.
Keep shellfish chilled at all times. Use within 1-2 days.

INSTRUCTIONS FOR USE
Operation

Precooked foods and leftovers	These should be stored in suitable covered containers so that the food will not dry out. Keep for only 1-2 days. Reheat leftovers only once and until steaming hot.
Vegetable container	The vegetable container is the optimum storage location for fresh fruit and vegetables. Take care not to store the following at temperatures of less than 6°C for long periods: Citrus fruit, melons, aborigines, pineapple, papaya, curette, passion fruit, cucumber, peppers, tomatoes. Undesirable changes will occur at low temperatures such as softening of the flesh, browning and/or accelerated decaying Do not refrigerate avocados (until they are ripe), bananas and mangoes.

FOOD	Location(Refrigerator)
Butter, cheese	Upper door rack
Eggs	Door rack
Fruit, vegetables, salad	Crisper
Meat, sausage, cheese, milk	Lower area (lowest shelf 1 crisper cover)
Dairy products, canned food, cans	Upper area or door rack
Drinks, bottles, tubes	Door rack

FOOD	Location(Freezer chamber)
Small frozen food	Door rack
Packaged frozen foods	Freezer drawer
Fish,meat,ice cream	Lower area(lower shelf or drawer)

INSTRUCTIONS FOR USE
Operation

Storage of foods:

Note: Food is not allowed to touch directly all surfaces inside the appliance. It has to be wrapped separately in aluminum sheet or in cellophane sheet or in airtight plastic boxes.

Freezing and storing food in the freezer compartment
- To store deep-frozen food.
- To make ice cubes.
- To freeze food.

Note: Ensure that the freezer compartment door has been closed properly.

Purchasing frozen food
- Packaging must not be damaged.
- Use by the 'use by /best before/best by/' date.
- If possible, transport deep-frozen food in an insulated bag and place quickly in the freezer compartment.

Storing frozen food
Store at -18°C or colder. Avoid opening the freezer compartment door unnecessarily.

Freezing fresh food
Freeze fresh and undamaged food only.
To retain the best possible nutritional value, flavour and colour, vegetables should be blanched before freezing.Aubergines, peppers, zucchini and asparagus do not require blanching.
- The following foods are suitable for freezing:
Cakes and pastries, fish and seafood, meat, game, poultry, vegetables, fruit, herbs, eggs without shells,dairy products such as cheese and butter, ready meals and leftovers such as soups, stews, cooked meat and fish, potato dishes, souffles and desserts.
- The following foods are not suitable for freezing:
Types of vegetables, which are usually consumed raw, such as lettuce or radishes, eggs in shells, grapes,whole apples, pears

Recommended storage times of frozen food in the freezer compartment
These times vary depending on the type of food. The food that you freeze can be preserved from 1 to 12 months (minimum at -18°C).

FOOD	STORAGE TIME
Bacon, casseroles, milk	1 month
Bread, ice cream, sausages, pies, prepared shellfish,oily fish	2 months
Non-oily fish, shellfish, pizza, scones and muffins	3 months
Ham, cakes, biscuits, beef and lamb chops, poultry pieces	4 months
Butter, vegetables (blanched), eggs whole and yolks,cooked crayfish, minced meat (raw), pork (raw)	6 months
Fruit (dry or in syrup), egg whites, beef (raw), whole chicken, lamb (raw), fruit cakes	12 months

CLEANING AND MAINTENANCE

Defrosting

This production has automatic defrosting function, without manual operation.

Cleaning

Precautions for internal and external cleaning of refrigerator:

- - Before cleaning, always turn off the power switch, disconnect the power plug.
- During cleaning, make sure that no water will enter the switch, control panel, doorlamp and top control box.
- Remove dirt from the outside of refrigerator with mild cleaner, then wipe with clean soft cloth, and let the refrigerator dry naturally.
- When cleaning door sealing strip, always use clean water, wipe with dry cloth and let it dry naturally. Wet soft cloth with warm water or neutral cleaner to wipe the refrigerator body except the door sealing strip.
- It is forbidden to flush the refrigerator directly with water,which will affect electrical insulation properties, etc.
- It is forbidden to clean the refrigerator with metal wipers,ware brushes, coarse abrasive cleaners,strong alkaline detergents,or flammable or toxic cleaning fluids.

After cleaning, connect the power plug of refrigerator,and connected with the refrigerator.

General information

On vacation

- When you want to leave for vacation, you had better to make the refrigerator operate continuously and leave foods that can be stored for a short time. If you want to stop the refrigerator, remove all foods, disconnect the power plug, clean the inside of refrigerator fully, and open the door to avoid producing abnormal odors.

At power failure

- Generally, short-term power failure will not affect the temperature of the refrigerator sharply. However, if power failure lasts for a long time, you shall reduce the opening frequency of refrigerator, and shall not put fresh foods into the refrigerator (prevent rise in the temperature of refrigerator from speeding up).
- If you know power failure is coming, you can turn on the “Super Freezer” function in advance to keep the temperature of refrigerator to the lowest value.

Shutdown

- Generally, it is not suggested to stop refrigerator or turn off the power switch; otherwise, the life of refrigerator may be affected.

Energy saving tips

- Make sure to keep the refrigerator away from heat source and direct sunlight.
- Before storing hot foods, cool them to room temperature and then put into refrigerator.
- Close the door timely, reduce the opening frequency, and shorten the opening time.
- When unfreezing frozen foods, you can put them into the refrigerating chamber, which will assist in refrigeration of the refrigerating chamber.
- Make sure that the temperature sensor is not covered or blocked by foods,and keep proper distance with foods.

TREOUBLESHOOTING

Normal phenomena



Button failure

- Controllare il pannello di controllo per verificare che non sia attiva la funzione blocco. In questa modalità tutti i pulsanti sono disabilitati.

Low voltage,the compressor can't start

- You should purchase pressurizer of more than 1000W when the area of the appliance installation,that's better to protect your fridge.

Long time to start

- When the ambient temperature too high, it will take long time to start the appliance.

Middle beams feel hot

- Middle beams feel hot after a period of time of the appliance run,it belongs to the normal phenomenon.

Dew drops

- When external air flows into the cool inner surface of the fridge,dew drops can be formed. If the humidity of the installed location is high or during the rainy season,dew drops can form on the outer side of the fridge.This is a natural phenomenon that occurs during the humid weather,Wipe the water drops with a dry cloth.

Noise

- When you operate the fridge for the first time,the fridge will operate at high speed to cool fast and the sound can seem louder.When the internal temperature falls below a certain level,the noise will subside. When the operation of the compressor is starting or ending;- various parts expanding/ contracting or various control devices operating or temperature change within the fridge,you will hear the sounds,these are normal sounds.

Compressor hot

- When working,the temperature of the compressor outer is more than touch 80°C the compressor,it may cuase serious injury.

Compressor long time running

- When the ambient temperature too high or put too much fresh foods into the fridge,it will take long time to cool down until the appliance run at the setting temperature.

TREOUBLESHOOTING

Before calling for service, review this list. It maysave you both time and expence. This list includes common occurences that are notthe result of defective workmanship or meterials in this appliance.

FAULT	POSSIBLECAUSE	REMEDIAL ACTION
No display on the display pannel	The mains plug of the appliance is not in the socket properly.	Check whether the power is on.
The compressor do not work	It's under defrosting mode.	It's normal for defrosting.
	Power is not connectd well.	Check whetwr.
Compressor runs too long	The fridge has recently been disconnect for a period of time;	it takes some hours for the fridge to cool down completelyl;
	Put too much fresh or not food;	Hot food will cause the fridge to run longer unitil the desired temperature is reached;
	Doors are opened too frequently or too long	Warm air entering the fridge to run longer. Open the door less often.
Vibrating nois	Floor is uneven or weak;	Be usre floor is level and solid canade-quately support fridge;
	Items placed on the top of the fridgeare vibrating;	Remove items;
	Fridge is touching wall or gabinets.	Move fridge so that does not touch the wall or cabinets.

Climate class:

- Extended temperate(SN): 'this refrigerating appliance is intended to be used at ambient temperatures ranging from 10 °C to 32 °C';
- Temperate(N): 'this refrigerating appliance is intended to be used at ambient temperatures ranging from 16 °C to 32 °C';
- Subtropical(ST): 'this refrigerating appliance is intended to be used at ambient temperatures ranging from 16 °C to 38 °C';
- Tropical(T): 'this refrigerating appliance is intended to be used at ambient temperatures ranging from 16 °C to 43 °C';
- Note: More data information, please scan the QR code on the energy label.

INSTALLATION

Transportation



- Do not carry the refrigerator horizontally or by laying it down.
- Do not carry the refrigerator by holding the door or handle; the refrigerator shall be carried by lifting the bottom.
- This unit should never be moved alone, two people are required to safely lift or move your unit.

Where to install your unit

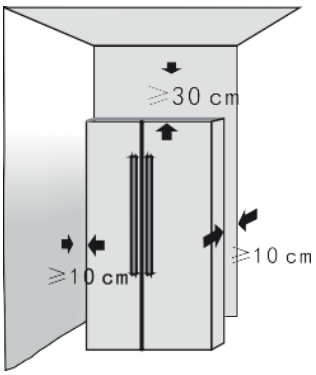

- The refrigerator must be placed on hard, flat ground; if cushioning is needed, stable, hard, nonflammable cushion blocks shall be used.
- DO NOT USE THE FOAM PACKAGING AS CUSHIONING BLOCKS!
- The unit shall be kept away from damp locations where water is present.Water or dirt should be removed from any surface of the unit as soon as possible using a soft cloth. This will help prevent rust and will help your unit run at peak efficiency.
- Place the refrigerator in a well-ventilated place, reserve a certain space around and behind the refrigerator, and do not cover or block the air grille on the rear cover plate of compressor at the back of refrigerator; Keep the refrigerator away from heat source or direct sunlight.

Adjustable plastic feet

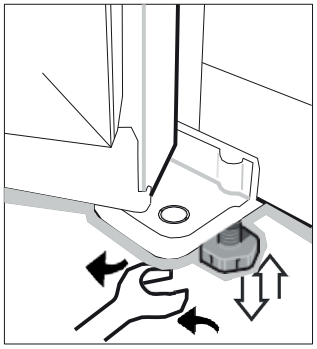

- When the refrigerator stays in the packing box, plastic feet are in tightened state. After carrying it out from the packing box for placement, please make sure to adjust two front plastic feet until the height is suitable; just adjust two plastic feet with a wrench or directly by hand.
- Plastic feet and rear rollers must touch the ground to prevent the refrigerator from movement, vibration or noise. When moving the refrigerator, adjust plastic feet counterclockwise to keep them off the ground, and then push the refrigerator gently to move it..

Door rack

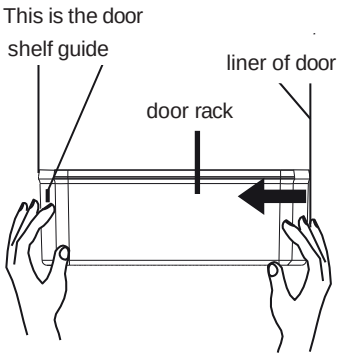

- Disassembly: Hold both sides of the door rack with both hands. Push it from the side without the guide and push it inward as seen in the diagram.Push until the edge of the door rack is separated from the grove of the liner.
- Installation :Hold both sides of the door rack with both hands. Install the buckle of the guide side at first. Then push the other side inward slightly,the guide will then click into place and the door rack will be installed. Please make sure it is installed properly before use..

INSTALLATION

Water pipe connection



Security clamp



Step 1) Remove the security clamp



Dust cap



Step 2) Remove the dust cap



Step 3) Connect the PE soft tube

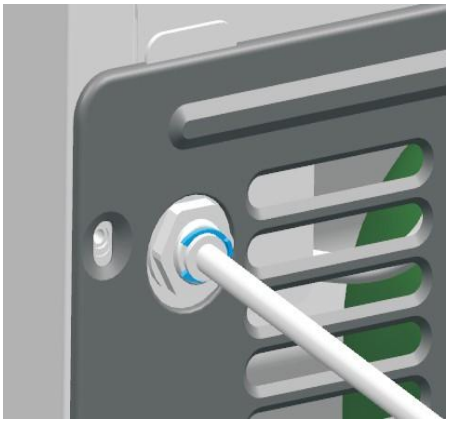

Step 4) Install the security clamp

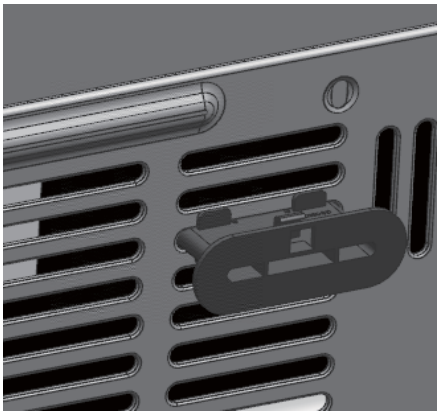

Blocco



Step 5) Install the block



Step 6) Install the PE soft tube (Sketch map)

INSTALLATION

Water pipe connection

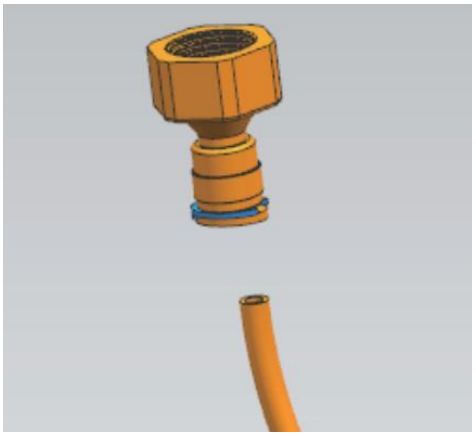

Step 7) Make sure the end of the water piper insert into connector.

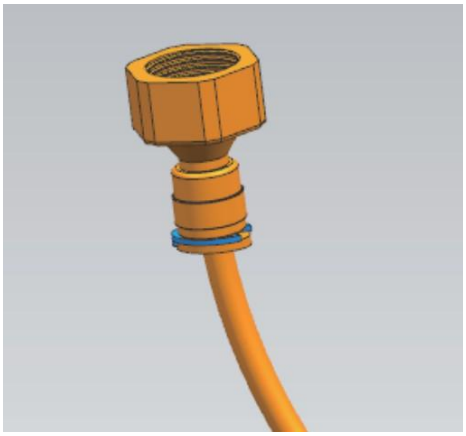

Step 8) Make sure will not loosen after insert.



Step 9) Screw the water pipe into the faucet(can sealed with tape).

Remark:
1) Connected to water pipe to check if there is leakage after the above steps finished;
2) The above materials are put in the poly bag for instruction;
3) Any questions of installation, plase contact with after sale service staff.

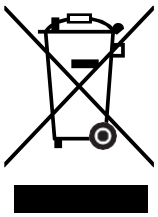

This marking indicates that this product should not be disposed with other household wastes throughout the EU. To prevent possible harm to the envirment or human health from uncontrolled waste disposal,recycle it responsibly to promote the sustainable resuse of material resources.
To return your used device,please use the return and collection systems or contact the retailer where the product was purchased.
They can take this product for envirmental safe recycling.

ILVE S.p.A

Via Antoniana 100
35011 Campodarsego
Padova – Italia

T. +39 049 9200990
F. +39 049 9201010

www.ilve.com